Public Notices

Business Observer

PAGES 17-52

PAGE 17 **Additional Public Notices may be accessed on BusinessObserverFL.com and the statewide legal notice website, FloridaPublicNotices.com** OCTOBER 16 - OCTOBER 22, 2026

LEE COUNTY LEGAL NOTICES

--- PUBLIC SALES ---

FIRST INSERTION

**NOTICE OF RULEMAKING
REGARDING THE REVISED RULES OF PROCEDURE OF THE
MOODY RIVER ESTATES COMMUNITY DEVELOPMENT DISTRICT**

In accordance with Chapters 120 and 190, Florida Statutes, the Moody River Estates Community Development District (the **"District"**) hereby gives the public notice of its intent to adopt its proposed revised Rules of Procedure (the **"Proposed Rule"**). The number for the Proposed Rules of the District is 2026-1. Prior notice of rule development relative to the Proposed Rules was published in the Business Observer Florida on October 9, 2026.

A public hearing will be conducted by the Board of Supervisors (the **"Board"**) District on **November 19, 2026, at 1:00 p.m. at Clubhouse at Moody River Estates, 3050 Moody River Blvd., in North Fort Myers, Florida**, relative to the adoption of the Proposed Rules. Pursuant to Sections 190.011(5) and 190.012(3), *Florida Statutes*, the Proposed Rules will not require legislative ratification.

The summary, purpose, and effect of the revised Rules of Procedure is to provide for efficient and effective District operations and to ensure compliance with recent changes to Florida law. The specific grant of rulemaking authority for the adoption of the Proposed Rule includes Sections 190.011(5), 190.011(15) and 190.035, *Florida Statutes*. The specific laws implemented in the Proposed Rule include, but are not limited to, Sections 112.08, 112.3143, 112.31446, 112.3145, 119.07, 119.0701, 120.54, 120.542, 120.5435, 120.56, 120.69, 120.81, 189.053, 189.069, 190.006, 190.007, 190.008, 190.011, 190.033, 190.035, 218.33, 218.391, 255.05, 255.0518, 255.0525, 255.20, 286.0105, 286.011, 286.012, 286.0113, 286.0114, 287.017, 287.055, and 287.084, *Florida Statutes*.

A statement of estimated regulatory costs, as defined in Section 120.541(2), *Florida Statutes*, has not been prepared relative to the Proposed Rule. Any person who wishes to provide the District with a proposal for a lower cost regulatory alternative as provided by Section 120.541(1), *Florida Statutes*, must do so in writing within twenty-one (21) days after publication of this notice to the District Manager's Office.

For more information regarding the public hearing, the Proposed Rules, or for a copy of the Proposed Rules and the related incorporated documents, if any, please contact the Office Manager c/o Melissa Gindling, c/o Premier District Management, 3820 Colonial Boulevard – Suite 101, Fort Myers, FL 33966, 239-690-7100 ext. 101, mgindling@cddmanagement.com (the "**District Manager's Office**").

This public hearing may be continued to a date, time, and place to be specified on the record at the hearing without additional notice. If anyone chooses to appeal any decision of the Board with respect to any matter considered at the public hearing, such person will need a record of the proceedings and should accordingly ensure that a verbatim record of the proceedings is made which includes the testimony and evidence upon which such appeal is to be based. At the public hearing, staff or Supervisors may participate in the public hearing by speaker telephone.

Pursuant to the provisions of the Americans with Disabilities Act, any person requiring special accommodations at this public hearing because of a disability or physical impairment should contact the District Manager's Office at least forty-eight (48) hours prior to the public hearing. If you are hearing or speech impaired, please contact the Florida Relay Service at 1-800-955-8771 or 1-800-955-8770 for aid in contacting the District Manager's Office.

Cal Teague, District Manager
Moody River Estates Community Development District
October 16, 2026 26-04384L

FIRST INSERTION

**Notice Under Fictitious Name Law
According to Florida Statute
Number 865.09**

NOTICE IS HEREBY GIVEN that the undersigned, desiring to engage in business under the Fictitious Name of TIKIKLEANZ located at 3108 Santa Barbara Blvd Ste 105 in the City of Cape Coral, Lee, FL 33914 intends to register the said name with the Division of Corporations of the Department of State, Tallahassee, Florida.

Dated this 9th day of October, 2026
Justin Samuell
Justin Samuel
October 16, 2026 26-04432L

FIRST INSERTION

**Notice Under Fictitious Name Law
Pursuant to Section 865.09, Florida
Statutes**

NOTICE IS HEREBY GIVEN that the undersigned, desiring to engage in business under the fictitious name of Peake Taxi located at 15601 Sonoma Dr Apt 105, in the County of Lee, in the City of Fort Myers, Florida 33908 intends to register the said name with the Division of Corporations of the Florida Department of State, Tallahassee, Florida.

Dated at Fort Myers, Florida, this 09th day of October, 2026.
PEAKE TRANSPORTATION LLC
October 16, 2026 26-04409L

FIRST INSERTION

**EAST BONITA BEACH ROAD COMMUNITY DEVELOPMENT DISTRICT
NOTICE OF FISCAL YEAR 2027 MEETINGS**

The Board of Supervisors ("Board") of the East Bonita Beach Road Community Development District ("District") will hold regular meetings for Fiscal Year 2027 at 10:30 a.m., at the offices of D.R. Horton, 10541 Ben C Pratt 6 Mile Cypress Parkway, Fort Myers, Florida, 3396 on the following dates:

November 26, 2026
December 24, 2026
January 28, 2027
February 25, 2027
March 25, 2027
April 22, 2027
May 27, 2027
June 24, 2027
July 22, 2027
August 26, 2027
September 23, 2027

The purpose of the meetings is for the Board to consider any business which may properly come before it. The meetings are open to the public and will be conducted in accordance with the provision of Florida Law. The meetings may be continued to a date, time, and place to be specified on the record at the meetings. There may be occasions when one or more Supervisors or staff will participate by telephone. A copy of the agenda for the meetings may be obtained from the office of the District Manager at least seven (7) days in advance of the meeting by contacting the District Manager's office at (561) 571-0010 ("District Manager's Office"), during normal business hours, or by visiting the District's website, https://www.eastbonitabeachroadcdd.net/.

Any person requiring special accommodations at the meetings because of a disability or physical impairment should contact the District Manager's Office at (561) 571-0010 at least 48 hours prior to the meetings. If you are hearing or speech impaired, please contact the Florida Relay Service by dialing 7-1-1, or 1-800-955-8771 (TTY) / 1-800-955-8770 (Voice), for aid in contacting the District Manager's Office.

A person who decides to appeal any decision made at the meetings with respect to any matter considered at the meetings is advised that person will need a record of the proceedings and that accordingly, the person may need to ensure that a verbatim record of the proceedings is made, including the testimony and evidence upon which such appeal is to be based.

District Manager
October 16, 2026 26-04480L

FIRST INSERTION

**NOTICE OF LANDOWNERS' MEETING AND ELECTION AND MEETING
OF THE BOARD OF SUPERVISORS OF THE SALTLEAF COMMUNITY
DEVELOPMENT DISTRICT**

Notice is hereby given to the public and all landowners within Saltleaf Community Development District (the "District") in Lee County, Florida, advising that a meeting of landowners will be held for the purpose of electing three (3) persons to the District Board of Supervisors. Immediately following the landowners' meeting, there will be convened a meeting of the Board of Supervisors for the purpose of considering certain matters of the Board to include election of certain District officers, and other such business which may properly come before the Board.

DATE: November 13, 2026
TIME: 3:00 P.M.
LOCATION: Estero Community Church
21115 Design Parc Lane
Estero, Florida 33928

Each landowner may vote in person or by written proxy. Proxy forms may be obtained upon request at the office of the District Manager, 2300 Glades Road, Suite 410W, Boca Raton, Florida 33431, (561) 571-0010 ("District Manager's Office"). At said meeting, each landowner or his or her proxy shall be entitled to nominate persons for the position of Supervisor and cast one vote per acre of land, or fractional portion thereof, owned by him or her and located within the District for each person to be elected to the position of Supervisor. A fraction of an acre shall be treated as one acre, entitling the landowner to one vote with respect thereto. Platted lots shall be counted individually and rounded up to the nearest whole acre. The acreage of platted lots shall not be aggregated for determining the number of voting units held by a landowner or a landowner's proxy. At the landowners' meeting, the landowners shall select a person to serve as the meeting chair and who shall conduct the meeting.

The landowners' meeting and the Board of Supervisors meeting are open to the public and will be conducted in accordance with the provisions of Florida law. One or both of the meetings may be continued to a date, time, and place to be specified on the record at such meeting. A copy of the agenda for these meetings may be obtained from 2300 Glades Road, Suite 410W, Boca Raton, Florida 33431. There may be an occasion where one or more supervisors will participate by telephone.

Any person requiring special accommodations to participate in these meetings is asked to contact the District Office at (877) 276-0889, at least 48 hours before the meeting. If you are hearing or speech impaired, please contact the Florida Relay Service at (800) 955-8770 for aid in contacting the District Office.

A person who decides to appeal any decision made by the Board with respect to any matter considered at the meeting is advised that such person will need a record of the proceedings and that accordingly, the person may need to ensure that a verbatim record of the proceedings is made, including the testimony and evidence upon which the appeal is to be based.

District Manager
October 16, 23, 2026 26-04464L

FIRST INSERTION

**STONEYBROOK COMMUNITY DEVELOPMENT DISTRICT
NOTICE OF FISCAL YEAR 2027 MEETINGS**

The Board of Supervisors ("Board") of the Stoneybrook Community Development District ("District") will hold Regular Meetings for Fiscal Year 2027 at the Stoneybrook Community Center, 11800 Stoneybrook Golf Drive, Estero, Florida 33928 on the following dates and times:

October 27, 2026 at 9:00 a.m.
November 24, 2026 at 9:00 a.m.
December 15, 2026 at 1:00 p.m.
January 26, 2027 at 9:00 a.m.
February 23, 2027 at 6:00 p.m.
March 23, 2027 at 9:00 a.m.
April 27, 2027 at 9:00 a.m.
May 25, 2027 at 6:00 p.m.
June 22, 2027 at 9:00 a.m.
July 27, 2027 at 9:00 a.m.
August 24, 2027 at 6:00 p.m.
September 28, 2027 at 9:00 a.m.

The purpose of the meetings is for the Board to consider any business which may properly come before it. The meetings are open to the public and will be conducted in accordance with the provision of Florida Law. The meetings may be continued to a date, time, and place to be specified on the record at the meetings. There may be occasions when one or more Supervisors or staff will participate by telephone. A copy of the agenda for the meetings may be obtained from the office of the District Manager at least seven (7) days in advance of the meeting by contacting the District Manager's office at (561) 571-0010 ("District Manager's Office"), during normal business hours, or by visiting the District's website, http://www.stoneybrookesterocdd.com/.

Any person requiring special accommodations at the meetings because of a disability or physical impairment should contact the District Manager's Office at (561) 571-0010 at least 48 hours prior to the meetings. If you are hearing or speech impaired, please contact the Florida Relay Service by dialing 7-1-1, or 1-800-955-8771 (TTY) / 1-800-955-8770 (Voice), for aid in contacting the District Manager's Office.

A person who decides to appeal any decision made at the meetings with respect to any matter considered at the meetings is advised that person will need a record of the proceedings and that accordingly, the person may need to ensure that a verbatim record of the proceedings is made, including the testimony and evidence upon which such appeal is to be based.

District Manager
October 16, 2026 26-04469L

FIRST INSERTION

**BAYSIDE IMPROVEMENT COMMUNITY DEVELOPMENT DISTRICT
AND BAY CREEK COMMUNITY DEVELOPMENT DISTRICT NOTICE OF
FISCAL YEAR 2027 JOINT MEETINGS**

The Boards of Supervisors ("Boards") of the Bayside Improvement and the Bay Creek Community Development Districts ("Districts") will hold Fiscal Year 2027 Joint Regular Meetings, on the fourth Monday of each month, at 2:00 p.m., unless otherwise indicated, at the Pelican Landing Community Center, 24501 Walden Center Drive, Bonita Springs, Florida 34134, on the following dates:

October 26, 2026
December 7, 2026
January 25, 2027
February 22, 2027
March 22, 2027
April 26, 2027
May 24, 2027
June 21, 2027
July 16, 2027 (Budget Workshop at 9:00 a.m.)
July 26, 2027
August 23, 2027
September 27, 2027

The purpose of the meetings is for the Board to consider any business which may properly come before it. The meetings are open to the public and will be conducted in accordance with the provision of Florida Law. The meetings may be continued to a date, time, and place to be specified on the record at the meetings. There may be occasions when one or more Supervisors or staff will participate by telephone. A copy of the agenda for the meetings may be obtained from the office of the District Manager at least seven (7) days in advance of the meeting by contacting the District Manager's office at (561) 571-0010 ("District Manager's Office"), during normal business hours, or by visiting the District's website, http://pelicanlandingcdds.net/.

Any person requiring special accommodations at the meetings because of a disability or physical impairment should contact the District Manager's Office at (561) 571-0010 at least 48 hours prior to the meetings. If you are hearing or speech impaired, please contact the Florida Relay Service by dialing 7-1-1, or 1-800-955-8771 (TTY) / 1-800-955-8770 (Voice), for aid in contacting the District Manager's Office.

A person who decides to appeal any decision made at the meetings with respect to any matter considered at the meetings is advised that person will need a record of the proceedings and that accordingly, the person may need to ensure that a verbatim record of the proceedings is made, including the testimony and evidence upon which such appeal is to be based.

District Manager
October 16, 2026 26-04465L

FIRST INSERTION

**NOTICE OF LANDOWNERS' MEETING AND ELECTION AND MEETING
OF THE BOARD OF SUPERVISORS OF THE SAVANNA LAKES
COMMUNITY DEVELOPMENT DISTRICT**

Notice is hereby given to the public and all landowners within Savanna Lakes Community Development District (the "District") in Lee County, Florida, advising that a meeting of landowners will be held for the purpose of electing three (3) persons to the District Board of Supervisors. Immediately following the landowners' meeting, there will be convened a meeting of the Board of Supervisors for the purpose of considering certain matters of the Board to include election of certain District officers, and other such business which may properly come before the Board.

DATE: November 13, 2026
TIME: 1:30 p.m.
LOCATION: 10461 Six Mile Cypress Parkway
Fort Myers, Florida 33966

Each landowner may vote in person or by written proxy. Proxy forms may be obtained upon request at the office of the District Manager, Wrathell, Hunt & Associates, LLC, 2300 Glades Road, Suite 410W, Boca Raton, Florida 33431, (877) 276-0889 ("District Manager's Office"). At said meeting each landowner or his or her proxy shall be entitled to nominate persons for the position of Supervisor and cast one vote per acre of land, or fractional portion thereof, owned by him or her and located within the District for each person to be elected to the position of Supervisor. A fraction of an acre shall be treated as one acre, entitling the landowner to one vote with respect thereto. Platted lots shall be counted individually and rounded up to the nearest whole acre. The acreage of platted lots shall not be aggregated for determining the number of voting units held by a landowner or a landowner's proxy. At the landowners' meeting the landowners shall select a person to serve as the meeting chair and who shall conduct the meeting.

The landowners' meeting and the Board of Supervisors meeting are open to the public and will be conducted in accordance with the provisions of Florida law. One or both of the meetings may be continued to a date, time, and place to be specified on the record at such meeting. A copy of the agenda for these meetings may be obtained from the District Manager's Office. There may be an occasion where one or more supervisors will participate by telephone.

Any person requiring special accommodations to participate in these meetings is asked to contact the District Manager's Office, at least 48 hours before the meeting. If you are hearing or speech impaired, please contact the Florida Relay Service at (800) 955-8770 for aid in contacting the District Manager's Office.

A person who decides to appeal any decision made by the Board with respect to any matter considered at the meeting is advised that such person will need a record of the proceedings and that accordingly, the person may need to ensure that a verbatim record of the proceedings is made, including the testimony and evidence upon which the appeal is to be based.

District Manager
October 16, 23, 2026 26-04468L

FIRST INSERTION

Fictitious Name Notice

Notice Is Hereby Given that TDCO Alico Crossing Storage, LLC, 5 Old Lancaster Rd, Malvern, PA 19355, is desiring to engage in business under the fictitious name of CubeSmart 3557, with its principal place of business in the State of Florida in the County of Lee, intends to file an Application for Registration of Fictitious Name with the Florida Department of State.
October 16, 2026 26-04387L

FIRST INSERTION

Fictitious Name Notice

Notice is hereby given that Anderson Fort Myers, LLC, desiring to engage in business under the fictitious name Lexus of Fort Myers located at 14200 S Tamiami Trail, Fort Myers, FL 33912, intends to register said name in Lee County with the Division of Corporations, Florida Department of State, pursuant to section 865.09 of the Florida Statutes.
October 16, 2026 26-04443L

FIRST INSERTION

Fictitious Name Notice

Notice Is Hereby Given that MHC 96 (Fort Myers FL), LLC, 11591 Chitwood Dr., Fort Myers FL 33908, is desiring to engage in business under the fictitious name of CubeSmart 3607, with its principal place of business in the State of Florida in the County of Lee, intends to file an Application for Registration of Fictitious Name with the Florida Department of State.
October 16, 2026 26-04386L

FIRST INSERTION

Fictitious Name Notice

Notice is hereby given that GOYAL DEVELOPMENT LLC, desiring to engage in business under the fictitious name GOYAL CONSTRUCTION located at 10163 AVONLEIGH DRIVE, BONITA SPRINGS, FL 34135, intends to register said name in LEE County with the Division of Corporations, Florida Department of State, pursuant to section 865.09 of the Florida Statutes.
October 16, 2026 26-04388L

PUBLISH YOUR LEGAL NOTICE
Call 941-906-9386 and select the appropriate County name from the menu option
or email legal@businessobserverfl.com
FLORIDA'S NEWSPAPER FOR THE C-SUITE
Business Observer
LV20878_V26

--- PUBLIC SALES ---

FIRST INSERTION

WILDBLUE COMMUNITY DEVELOPMENT DISTRICT
NOTICE OF MEETING

Notice is hereby given that the Board of Supervisors ("Board") of the WildBlue Community Development District ("District") will hold a Regular Meeting on November 5, 2026 at 10:00 a.m., at the Community Center (Card Room), 18721 WildBlue Boulevard, Fort Myers, Florida 33913 for the purpose of considering any business that may properly come before the Board.

The meeting is open to the public and will be conducted in accordance with the provision of Florida law. The meeting may be continued to a date, time, and place to be specified on the record at the meeting. A copy of the agenda for the meeting may be obtained by contacting the offices of the District Manager, Wrathell, Hunt & Associates, LLC, 2300 Glades Road, Suite 410W, Boca Raton, Florida 33431, (561) 571-0010, during normal business hours or by visiting the District's website, http://wildbluecdd.net/.

There may be occasions when one or more Supervisors or staff will participate by telephone. Pursuant to provisions of the Americans with Disabilities Act, any person requiring special accommodations at the meeting because of a disability or physical impairment should contact the District Office at (561) 571-0010 at least 48 hours prior to the meeting. If you are hearing or speech impaired, please contact the Florida Relay Service by dialing 7-1-1, or 1-800-955-8771 (TTY) / 1-800-955-8770 (Voice), for aid in contacting the District Office.

A person who decides to appeal any decision made at the meeting with respect to any matter considered at the meeting is advised that person will need a record of the proceedings and that accordingly, the person may need to ensure that a verbatim record of the proceedings is made, including the testimony and evidence upon which such appeal is to be based.

District Manager
October 16, 2026 26-04481L

FIRST INSERTION

REQUEST FOR QUALIFICATIONS FOR ENGINEERING SERVICES FOR THE STAR FARMS AT CAPE CORAL COMMUNITY DEVELOPMENT DISTRICT
RFQ for Engineering Services

The Star Farms at Cape Coral Community Development District (the "District"), located in the City of Cape Coral, Lee County, Florida, announces that professional engineering services will be required on a continuing basis for the District's stormwater management, roadways, water, wastewater and reuse systems, earthwork, hardscape, landscape, underground electric conduit and other public improvements authorized by Chapter 190, Florida Statutes. The engineering firm selected will act in the general capacity of District Engineer and will provide District engineering services, as required.

Any firm or individual ("Applicant") desiring to provide professional services to the District must: 1) hold applicable federal, state and local licenses; 2) be authorized to do business in Florida in accordance with Florida law; and 3) furnish a statement ("Qualification Statement") of its qualifications and past experience on U.S. General Service Administration's "Architect-Engineer Qualifications, Standard Form No. 330," with pertinent supporting data. Among other things, Applicants must submit information relating to: a) the ability and adequacy of the Applicant's professional personnel; b) whether the Applicant is a certified minority business enterprise; c) the Applicant's willingness to meet time and budget requirements; d) the Applicant's past experience and performance, including but not limited to past experience as a District Engineer for any community development districts and past experience with the City of Cape Coral and Lee County; e) the geographic location of the Applicant's headquarters and offices; f) the current and projected workloads of the Applicant; and g) the volume of work previously awarded to the Applicant by the District. Further, each Applicant must identify the specific individual affiliated with the Applicant who would be handling District meetings, construction services, and other engineering tasks.

The District will review all Applicants and will comply with Florida law, including the Consultant's Competitive Negotiations Act, Chapter 287, Florida Statutes ("CCNA"). All Applicants interested must submit (1) unbound and (1) electronic copy of Standard Form No. 330 and the Qualification Statement by 12:00 p.m., on October 30, 2026 to the attention of District Manager, Wrathell, Hunt and Associates, LLC, 2300 Glades Road, Suite 410W, Boca Raton, Florida 33431 ("District Manager's Office").

The Board shall select and rank the Applicants using the requirements set forth in the CCNA and the evaluation criteria on file with the District Manager, and the highest ranked Applicant will be requested to enter into contract negotiations. If an agreement cannot be reached between the District and the highest ranked Applicant, negotiations will cease and begin with the next highest ranked Applicant, and if these negotiations are unsuccessful, will continue to the third highest ranked Applicant.

The District reserves the right to reject any and all Qualification Statements. Additionally, there is no express or implied obligation for the District to reimburse Applicants for any expenses associated with the preparation and submittal of the Qualification Statements in response to this request.

Any protest regarding the terms of this Notice, or the evaluation criteria on file with the District Manager, must be filed in writing, within seventy-two (72) hours (excluding weekends) after the publication of this Notice. The formal protest setting forth with particularity the facts and law upon which the protest is based shall be filed within seven (7) calendar days after the initial notice of protest was filed. Failure to timely file a notice of protest or failure to timely file a formal written protest shall constitute a waiver of any right to object or protest with respect to aforesaid Notice or evaluation criteria provisions. Any person who files a notice of protest shall provide to the District, simultaneous with the filing of the notice, a protest bond with a responsible surety to be approved by the District and in the amount of Ten Thousand Dollars ($10,000.00).
October 16, 2026 26-04482L

FIRST INSERTION

Notice Under Fictitious Name Law According to Florida Statute Number 865.09
NOTICE IS HEREBY GIVEN that the undersigned, desiring to engage in business under the Fictitious Name of Babcock Ranch Hub located at 12418 Citrine St in the City of Alva, Lee, FL 33920 intends to register the said name with the Division of Corporations of the Department of State, Tallahassee, Florida.
Dated this 13th day of October, 2026
Michael S Jackson
October 16, 2026 26-04486L

FIRST INSERTION

Notice Under Fictitious Name Law According to Florida Statute Number 865.09
NOTICE IS HEREBY GIVEN that the undersigned, desiring to engage in business under the Fictitious Name of CAH Group located at 6330 Techster Blvd in the City of Fort Myers, Lee, FL 33966 intends to register the said name with the Division of Corporations of the Department of State, Tallahassee, Florida.
Dated this 14th day of October, 2026
JHS - BCC Holdings, LLC
October 16, 2026 26-04491L

FIRST INSERTION

Notice Under Fictitious Name Law According to Florida Statute Number 865.09
NOTICE IS HEREBY GIVEN that the undersigned, desiring to engage in business under the Fictitious Name of Water by Pablo located at 18911 Sandrine Dr Ap 107 in the City of Fort Myers, Lee, FL 33967 intends to register the said name with the Division of Corporations of the Department of State, Tallahassee, Florida.
Dated this 9th day of October, 2026
Pablo Pazmino
October 16, 2026 26-04446L

FIRST INSERTION

Notice Under Fictitious Name Law According to Florida Statute Number 865.09
NOTICE IS HEREBY GIVEN that the undersigned, desiring to engage in business under the Fictitious Name of VVOXA located at 1140 NW 1st pl in the City of Cape Coral, Lee, FL 33993 intends to register the said name with the Division of Corporations of the Department of State, Tallahassee, Florida.
Dated this 9th day of October, 2026
Daniel Loshkarev
October 16, 2026 26-04412L

FIRST INSERTION

STAR FARMS AT CAPE CORAL COMMUNITY DEVELOPMENT DISTRICT
REQUEST FOR PROPOSALS FOR ANNUAL AUDIT SERVICES

The Star Farms at Cape Coral Community Development District hereby requests proposals for annual financial auditing services. The proposal must provide for the auditing of the District's financial records for the fiscal year ending September 30, 2027, with an option for additional annual renewals, subject to mutual agreement by both parties. The District is a local unit of special-purpose government created under Chapter 190, Florida Statutes, for the purpose of financing, constructing, and maintaining public infrastructure. The District is located in the City of Cape Coral, Lee County, Florida, and has an annual operating budget of approximately $80,175. The final contract will require that, among other things, the audit for the fiscal year ending September 30, 2027, be completed no later than June 30, 2028.

The auditing entity submitting a proposal must be duly licensed under Chapter 473, Florida Statutes, and be qualified to conduct audits in accordance with "Government Auditing Standards," as adopted by the Florida Board of Accountancy. Audits shall be conducted in accordance with Florida Law and particularly Section 218.39, Florida Statutes, and the rules of the Florida Auditor General.

Proposal packages, which include evaluation criteria and instructions to proposers, are available from the District Manager at the address and telephone number listed below. Proposers must provide one (1) unbound and one (1) electronic copy of their proposal to the District Manager, Wrathell, Hunt and Associates, LLC, 2300 Glades Road, Suite 410W, Boca Raton, Florida 33431, (561) 571-0010 in an envelope marked on the outside "Auditing Services, Star Farms at Cape Coral Community Development District." Proposals must be received by 12:00 p.m., on October 23, 2026, at the office of the District Manager. Please direct all questions regarding this Notice to the District Manager.

Chesley (Chuck) E Adams, Jr.
District Manager
October 16, 2026 26-04483L

FIRST INSERTION

RIVER RIDGE COMMUNITY DEVELOPMENT DISTRICT
NOTICE OF FISCAL YEAR 2027 MEETINGS

The Board of Supervisors ("Board") of the River Ridge Community Development District ("District") will hold Regular Meetings for Fiscal Year 2027 at 1:00 p.m., in person at the Sound Room of the River Club Conference Center, (second floor of Fitness Center), 4784 Pelican Sound Boulevard, Estero, Florida 33928 and via Zoom, on the following dates:

October 27, 2026
https://us02web.zoom.us/j/83865523895
Meeting ID: 838 6552 3895 Dial by your location 1-305-224-1968
November 17, 2026
https://us02web.zoom.us/j/82164301950
Meeting ID: 821 6430 1950 Dial by your location 1-305-224-1968
December 8, 2026
https://us02web.zoom.us/j/84235948777
Meeting ID: 842 3594 8777 Dial by your location 1-305-224-1968
January 26, 2027
https://us02web.zoom.us/j/82499123075
Meeting ID: 824 9912 3075 Dial by your location 1-305-224-1968
February 23, 2027
https://us02web.zoom.us/j/83075929393
Meeting ID: 830 7592 9393 Dial by your location 1-305-224-1968
March 23, 2027
https://us02web.zoom.us/j/83075929393
Meeting ID: 830 7592 9393 Dial by your location 1-305-224-1968
April 27, 2027
https://us02web.zoom.us/j/83075929393
Meeting ID: 830 7592 9393 Dial by your location 1-305-224-1968
May 25, 2027
https://us02web.zoom.us/j/83075929393
Meeting ID: 830 7592 9393 Dial by your location 1-305-224-1968
June 22, 2027
https://us02web.zoom.us/j/83075929393
Meeting ID: 830 7592 9393 Dial by your location 1-305-224-1968
July 27, 2027
https://us02web.zoom.us/j/83075929393
Meeting ID: 830 7592 9393 Dial by your location 1-305-224-1968
August 24, 2027
https://us02web.zoom.us/j/83075929393
Meeting ID: 830 7592 9393 Dial by your location 1-305-224-1968
September 28, 2027
https://us02web.zoom.us/j/83075929393
Meeting ID: 830 7592 9393 Dial by your location 1-305-224-1968

The District fully encourages public participation in a safe and efficient manner. To that end, any member of the public interested in listening to and participating in the meeting may do so via the Zoom details specified above.

The purpose of the meetings is for the Board to consider any business which may properly come before it. The meetings are open to the public and will be conducted in accordance with the provision of Florida Law. The meetings may be continued to a date, time, and place to be specified on the record at the meetings. There may be occasions when one or more Supervisors or staff will participate by telephone. A copy of the agenda for the meetings may be obtained from the office of the District Manager at least seven (7) days in advance of the meeting by contacting the District Manager's office at (561) 571-0010 ("District Manager's Office"), during normal business hours, or by visiting the District's website, https://riverridgecdd.net/.

Any person requiring special accommodations at the meetings because of a disability or physical impairment should contact the District Manager's Office at (561) 571-0010 at least 48 hours prior to the meetings. If you are hearing or speech impaired, please contact the Florida Relay Service by dialing 7-1-1, or 1-800-955-8771 (TTY) / 1-800-955-8770 (Voice), for aid in contacting the District Manager's Office.

A person who decides to appeal any decision made at the meetings with respect to any matter considered at the meetings is advised that person will need a record of the proceedings and that accordingly, the person may need to ensure that a verbatim record of the proceedings is made, including the testimony and evidence upon which such appeal is to be based.

District Manager
October 16, 2026 26-04488L

FIRST INSERTION

PUBLIC SALE
Extra Space Storage, on behalf of itself , will hold a public auction to sell personal property described below belonging to those individuals listed below at the location indicated: 25420 Bernwood Dr, Bonita Springs, FL 34135. November 3rd, 2026 at 11am.
Customer Name: Dennis Segatto
Description of items: Vacuum, walker, suitcases, trophies, crutches, wall art, clothing, hand tools and power tools.
The auction will be listed and advertised on www.storagetreasures.com. Purchases must be made with cash only and paid at the above referenced facility in order to complete the transaction. Extra Space Storage may refuse any bid and may rescind any purchase up until the winning bidder takes possession of the personal property.
October 16, 23, 2026 26-04466L

FIRST INSERTION

PUBLIC SALE
Extra Space Storage, on behalf of itself or its affiliates, Life Storage or Storage Express, will hold a public auction to sell personal property described below belonging to those individuals listed below at the location indicated: **24381 S. Tamiami, Bonita Springs, FL 34134 November 05th, 2026, at 11:00am.**
Paul Bartorelli
Household Goods
The auction will be listed and advertised on www.storagetreasures.com. Purchases must be made with cash only and paid at the above referenced facility in order to complete the transaction. Extra Space Storage may refuse any bid and may rescind any purchase until the winning bidder takes possession of the personal property.
October 16, 23, 2026 26-04385L

FIRST INSERTION

NOTICE OF ACTION FOR DISSOLUTION OF MARRIAGE (NO CHILD OR FINANCIAL SUPPORT)
IN THE CIRCUIT COURT OF THE TWENTIETH JUDICIAL CIRCUIT, IN AND FOR LEE COUNTY, FLORIDA
CASE NO: 26-DR-006975
IN RE: The Marriage of
Sheldon Michael Ealy
Petitioner
and
Kay-Lynn Smith
Respondent
TO: Kay-Lynn Smith
18130 29th Drive SE, Bothell, Washington 98012-9308
YOU ARE NOTIFIED that an action for dissolution of marriage has been filed against you and that you are required to serve a copy of your written defenses, if any, to it on Sheldon Michael Ealy whose address is 7280 Eagles Perch Drive, Jacksonville, Florida 32244 on or before 11/16/2026, and file the original with the clerk of this Court at 1700 Monroe Street, Fort Myers, Florida 33901 before service on Petitioner or immediately thereafter. If you fail to do so, a default may be entered against you for the relief demanded in the petition.
Copies of all court documents in this case, including orders, are available at the Clerk of Circuit Court's office. You may review these documents upon request.
You must keep the Clerk of the Circuit Court's office notified of your current address. (You may file Designation of Current Mailing and E-Mail Address, Florida Supreme Court Approved Family Law Form 12.915.) Future papers in this lawsuit will be mailed or e-mailed to the address(es) on record at the clerk's office.
WARNING: Rule 12.285, Florida Family Law Rules of Procedure, requires certain automatic disclosure of documents and information. Failure to comply can result in sanctions, including dismissal or striking of pleadings.
Dated: 10/06/2026
Kevin C. Karnes
CLERK OF THE CIRCUIT COURT
(SEAL) By: S Lazenby
Deputy Clerk
Oct. 16, 23, 30; Nov. 6, 2026
26-04433L

FIRST INSERTION

Notice Under Fictitious Name Law According to Florida Statute Number 865.09
NOTICE IS HEREBY GIVEN that the undersigned, desiring to engage in business under the Fictitious Name of MACKOUL PEDIATRICS CAPE CORAL located at 206 SE 16TH PLACE in the City of Cape Coral, Lee, FL 33990 intends to register the said name with the Division of Corporations of the Department of State, Tallahassee, Florida.
Dated this 13th day of October, 2026
MIMOSA PEDIATRICS INC
October 16, 2026 26-04471L

FIRST INSERTION

Notice Under Fictitious Name Law According to Florida Statute Number 865.09
NOTICE IS HEREBY GIVEN that the undersigned, desiring to engage in business under the Fictitious Name of Titan Electrical located at 17600 East Street in the City of Fort Myers, Lee, FL 33917 intends to register the said name with the Division of Corporations of the Department of State, Tallahassee, Florida.
Dated this 13th day of October, 2026
Titan Electrical Services of Southwest Florida, LLC
October 16, 2026 26-04470L

FIRST INSERTION

Notice Under Fictitious Name Law According to Florida Statute Number 865.09
NOTICE IS HEREBY GIVEN that the undersigned, desiring to engage in business under the Fictitious Name of Cruz 3D Designs located at 8920 College Pointe Ct Apt 318 in the City of Fort Myers, Lee, FL 33919 intends to register the said name with the Division of Corporations of the Department of State, Tallahassee, Florida.
Dated this 8th day of October, 2026
Tennis Tips IQ LLC
Gustavo de Oliveira Cruz, Authorized Member
October 16, 2026 26-04400L

FIRST INSERTION

Notice Under Fictitious Name Law According to Florida Statute Number 865.09
NOTICE IS HEREBY GIVEN that the undersigned, desiring to engage in business under the Fictitious Name of AluK North America located at 11600 ADELMO LANE in the City of FT. MYERS, Lee County, FL 33966 intends to register the said name with the Division of Corporations of the Department of State, Tallahassee, Florida.
Dated this 13th day of October, 2026
AMERICAN WINDOWS & SHUTTERS, INC..
MASSIMO RIGONI
October 16, 2026 26-04485L

FIRST INSERTION

NOTICE OF ACTION FOR PUBLICATION
IN THE CIRCUIT COURT OF THE TWENTIETH JUDICIAL CIRCUIT, IN AND FOR LEE FLORIDA
CASE NO:18-DR-5275
IN THE MATTER OF:
GLADISLEIDYS GONZALEZ MARTINEZ
Petitioner
and
FREDDY HECTOR CORCHO
Respondent
TO: FREDDY HECTOR CORCHO (Respondent)
Last Known address: 825 W 29th. Street, Apt 8, Hialeah, FL 33012
YOU ARE NOTIFIED that an action regarding the Petition for Supplemental Petition has been filed in the Circuit Court of the Twentieth Judicial Circuit for Lee County. You are required to serve an Answer or responsive pleadings to this action upon JORGE J. SANTANA, ESQ., of SANTANA LAW, P.A., Petitioner's attorney, whose address is 8191 College Parkway, Suite 200, Fort Myers, FL 33919, on or before 11/23/2026 and file the original with the clerk of this court at Lee County Justice Center, 1700 Monroe Street, Fort Myers, Florida 33901, either before service on Petitioner's attorney or immediately thereafter.
Copies of all court documents in this case, including orders, are available at the Clerk of the Circuit Court's office. You may review these documents upon request.
You must keep the Clerk of the Circuit's office notified of your current address. (You may file Notice of Current Address, Florida Supreme Court Approval Family Law Form 12.915) Future papers in this lawsuit will be mailed to the address on records at the clerk's office.
WARNING: Rule 12.285, Florida Family Law Rules of Procedure, requires certain automatic disclosure of documents and information. Failure to comply can result in sanctions, including dismissal or strike of pleadings.
DATED this 12th day of October
Kevin C. Karnes
CLERK OF THE CIRCUIT COURT
(SEAL) By: B Willey
Deputy Clerk
Oct. 16, 23, 30; Nov. 6, 2026
26-04458L

FIRST INSERTION

Notice Under Fictitious Name Law According to Florida Statute Number 865.09
NOTICE IS HEREBY GIVEN that the undersigned, desiring to engage in business under the Fictitious Name of Solar Energy Solutions by EcoSmart located at 396 Alhambra Circle Suite PH-1B in the City of Coral Gables, Lee, FL 33134 intends to register the said name with the Division of Corporations of the Department of State, Tallahassee, Florida.
Dated this 9th day of October, 2026
Ecosmart Southwest Florida LLC
October 16, 2026 26-04445L

FIRST INSERTION

Notice Under Fictitious Name Law According to Florida Statute Number 865.09
NOTICE IS HEREBY GIVEN that the undersigned, desiring to engage in business under the Fictitious Name of Loved Again Littles located at 8336 bahamas rd in the City of fort myers, Lee, FL 33967 intends to register the said name with the Division of Corporations of the Department of State, Tallahassee, Florida.
Dated this 9th day of October, 2026
michelle laiacona
October 16, 2026 26-04431L

FIRST INSERTION

Notice Under Fictitious Name Law According to Florida Statute Number 865.09
NOTICE IS HEREBY GIVEN that the undersigned, desiring to engage in business under the Fictitious Name of Tom's Home Watch located at 13491 Causeway Palms Cove in the City of Fort Myers, Lee, FL 33908 intends to register the said name with the Division of Corporations of the Department of State, Tallahassee, Florida.
Dated this 11th day of October, 2026
Suits and Sandals L.L.C.
Thomas Schneidermeyer, Authorized Member
October 16, 2026 26-04447L

FIRST INSERTION

Notice Under Fictitious Name Law According to Florida Statute Number 865.09
NOTICE IS HEREBY GIVEN that the undersigned, desiring to engage in business under the Fictitious Name of Harborlight Psychiatric located at 11057 Harbour Yacht Ct, Unit 201 in the City of Fort Myers, Lee, FL 33908 intends to register the said name with the Division of Corporations of the Department of State, Tallahassee, Florida.
Dated this 14th day of October, 2026
Megan E. Kenny
October 16, 2026 26-04410L

--- PUBLIC SALES ---

FIRST INSERTION

NOTICE OF ACTION FOR DISSOLUTION OF MARRIAGE (NO CHILD OR FINANCIAL SUPPORT)

IN THE CIRCUIT COURT OF THE TWENTIETH JUDICIAL CIRCUIT, IN AND FOR LEE COUNTY, FLORIDA

Case No.: 26-DR-007122

YASHIRA RODRIGUEZ,
Petitioner,
and
Nelson R Treminio Vivas,
Respondent,

TO: Nelson R Treminio Vivas
Address unknown, Unknown

YOU ARE NOTIFIED that an action for dissolution of marriage has been filed against you and that you are required to serve a copy of your written defenses, if any, to it on YASHIRA RODRIGUEZ, whose address is 2221 E 5th St Apt 11, Lehigh Acres, FL 33936 on or before 11/23/2026 and file the original with the clerk of this Court at 1700 Monroe St Fort Myers FL 33913 before service on Petitioner or immediately thereafter. If you fail to do so, a default may be entered against you for the relief demanded in the petition.

Copies of all court documents in this case, including orders, are available at the Clerk of the Circuit Court's office. You may review these documents upon request.

You must keep the Clerk of the Circuit Court's office notified of your current address. (You may file Designation of Current Mailing and E-Mail Address, Florida Supreme Court Approved Family Law Form 12.915.) Future papers in this lawsuit will be mailed or e-mailed to the address(es) on record at the clerk's office.

WARNING: Rule 12.285, Florida Family Law Rules of Procedure, requires certain automatic disclosure of documents and information. Failure to comply can result in sanctions, including dismissal or striking of pleadings.

Dated: 10/12/2026

Kevin C. Karnes
CLERK OF THE CIRCUIT COURT
(SEAL) By: S Lazenby
Deputy Clerk

Oct. 16, 23, 30; Nov. 6, 2026
26-04476L

FIRST INSERTION

ADVERTISEMENT OF SALE

NOTICE IS HEREBY GIVEN that the undersigned intends to sell the personal property described below to enforce a lien imposed on said property under The Florida Self Storage Facility Act Statutes (Section 83.801-83.809). The undersigned will sell at public sale by competitive bidding on Wednesday the 18th day of November, 2026 at 12:00 PM, at lockerfox.com. Said property has been stored and is located at: Space Shop Self Storage, 22 Beth Stacey Blvd, Lehigh Acres, FL, 33936. WONG, AUSTIN MARCO TOTES, BOXES, FISHING POLES, CAR JACK; Kelly, Tiana SOFA SET, COMPUTER, GAME CHAIR, TRASH BAGS, TV STAND; Ramos, Daysy BAGS OF CLOTHES, LAMP, WALKER; Fernandez, Ruben BACK PACK, SHOES, CLOTHES; Gibson, Gregory Allan TOTES, WORK SHOP TOOLS, BAGS; Wright, Ashleigh REFRIGERATER, LAWN MOWER, GAS TANK, TOOL BOX; Gordon, Ralston BOXES, CONTAINERS Sale is subject to cancellation in the event of settlement between owner and obligated party.

October 16, 23, 2026 26-04441L

FIRST INSERTION

Fictitious Name Notice

Notice is hereby given that NEXA MORTGAGE, LLC, OWNER, desiring to engage in business under the fictitious name of EAST COAST MORTGAGE located at 5559 S SOSSAMAN RD BLDG #1, STE #101, MESA,, ARIZONA 85212 intends to register the said name in LEE county with the Division of Corporations, Florida Department of State, pursuant to section 865.09 of the Florida Statutes.

October 16, 2026 26-04444L

FIRST INSERTION

Fictitious Name Notice

Notice is hereby given that Anderson Fort Myers AA, LLC, desiring to engage in business under the fictitious name Fred Anderson Acura of Fort Myers located at 14270 S Tamiami Trail, Fort Myers, FL 33912, intends to register said name in Lee County with the Division of Corporations, Florida Department of State, pursuant to section 865.09 of the Florida Statutes

October 16, 2026 26-04408L

FIRST INSERTION

Motto Mortgage Infinity Announces Rebrand to One Infinity Mortgage

New name reflects a continued commitment to personal service for Florida homebuyers and homeowners.

FORT MYERS, Fla., October 16th, 2026 — Infinity Mortgage of SWFL, LLC, a mortgage brokerage serving Florida since 2019, announces its rebrand from Motto Mortgage Infinity to One Infinity Mortgage.

The new brand brings a fresh identity to the existing company, with the same ownership and a continued focus on helping clients navigate home purchases and refinancing. Based in Fort Myers, One Infinity Mortgage builds on its Southwest Florida roots while serving homebuyers and homeowners throughout Florida.

"Our name is changing, but our commitment to the people we serve remains the same," said Terry Wayland, President and Owner. "Buying a home is a major financial decision. We want our clients to have clear answers, understand their options and feel supported from the first conversation through closing."

As a mortgage brokerage, One Infinity Mortgage helps borrowers explore financing options through its lending relationships and provides guidance throughout the application and closing process. The team works with first-time homebuyers, repeat buyers and homeowners considering refinancing.

"Our goal is straightforward: make the mortgage process easier to understand and keep clients informed along the way," Wayland added. "One Infinity Mortgage represents our continued investment in the relationships we have built and the communities we serve."

For more information, contact info@OneInfinityMortgage.com.

About One Infinity Mortgage

One Infinity Mortgage is the new brand of Infinity Mortgage of SWFL, LLC, an established residential mortgage brokerage based in Fort Myers, Florida. The company helps homebuyers and homeowners throughout Florida explore home purchase and refinance options through personalized guidance and lending relationships.

Company NMLS ID: 1865732
Equal Housing Opportunity

October 16, 2026 26-04406L

FIRST INSERTION

PUBLIC SALE

Notice is hereby given that on dates below these vehicles will be sold at public sale on the date listed below at 10AM for money owed for vehicle repair and storage cost pursuant to Florida Statutes 713.585 or Florida Statutes 713.78. Please note, parties claiming interest have right to a hearing prior to the date of sale with the Clerk of Courts as reflected in the notice. The owner has the right to recover possession of the vehicle without judicial proceedings as pursuant to Florida Statute 559.917. Any proceeds recovered from the sale of the vehicle over the amount of the lien will be deposited with the clerk of the court for disposition upon court order.

SALE DATE: NOVEMBER 30 2026: M & S PROTECH,LLC DBA EUROTECH AUTO SERVICE AND REPAIR

17081 CAM COURT STE 1 & 2
FORT MYERS,FL 33967
(239)719-6110 MV102711 2015 INFI JN1BV7AP1FM357528 $1,182.44

October 16, 2026 26-04484L

FIRST INSERTION

Fictitious Name Notice

Notice is hereby given that Hands on Deck Boat Cleaning LLC, desiring to engage in business under the fictitious name of 'Hands on Deck Marine Maintenance', located at 16141 Pine Ridge Road, Fort Myers, FL 33908 Unit 5, in Lee County, intends to register the said name with the Division of Corporations, Florida Department of State, pursuant to section 865.09 of the Florida Statutes.

October 16, 2026 26-04442L

FIRST INSERTION

Fictitious Name Notice

Notice is hereby given that Entech Computer Services, LLC desiring to engage in business under the fictitious name BoomTech located at 5276 Summerlin Commons Way #701, Fort Meyers, FL 33907, intends to register said name in Lee County with the Division of Corporations, Florida Department of State, pursuant to section 865.09 of the Florida Statutes

October 16, 2026 26-04389L

FIRST INSERTION

NOTICE UNDER FICTITIOUS NAME LAW PURSUANT TO SECTION 865.09, FLORIDA STATUTES

NOTICE IS HEREBY GIVEN that the undersigned, desiring to engage in business under fictitious name of Touchstone Wealth Partners located at: 27599 Riverview Center., Suite 120 in the city of Bonita Springs, FL 34134 intends to register the said name with the Division of Corporations of the Florida Department of State, Tallahassee, Florida.

Dated this 7th day of October 2026.

OWNER:
TWP MSO LLC
27599 Riverview Center Blvd.,
Suite 120
Bonita Springs, FL 34134

October 16, 2026 26-04405L

FIRST INSERTION

Notice Under Fictitious Name Law According to Florida Statute Number 865.09

NOTICE IS HEREBY GIVEN that the undersigned, desiring to engage in business under the Fictitious Name of JD Systems located at 589 Gnu Dr in the City of North Fort Myers, Lee, FL 33917 intends to register the said name with the Division of Corporations of the Department of State, Tallahassee, Florida.

Dated this 8th day of October, 2026

Jose Diego-Aguilar

October 16, 2026 26-04411L

FIRST INSERTION

NOTICE UNDER FICTITIOUS NAME LAW PURSUANT TO SECTION 865.09, FLORIDA STATUTES

NOTICE IS HEREBY GIVEN that Alberto Concepcion / FLORIDA BIOIDENTICAL HORMONE AND TELEHEALTH INTERNAL MEDICINE, P.A. will engage in business under the fictitious name OPTIMA HORMONE AND LONGEVITY, with a physical address 27081 flamingo dr Bonita springs, FL 34135, with a mailing address 27081 flamingo dr Bonita springs, FL 34135, and already registered the name mentioned above with the Florida Department of State, Division of Corporations.

October 16, 2026 26-04407L

FIRST INSERTION

NOTICE OF APPLICATION FOR TAX DEED
Section 197.512 F.S.

Tax Deed #:2026000814

NOTICE IS HEREBY GIVEN that ATCF II Florida-A LLC the holder of the following certificate(s) has filed said certificate(s) for a tax deed to be issued thereon. The certificate number(s), year(s) of issuance, the description of the property and the name(s) in which it was assessed are as follows:

Certificate Number: 24-09112 Year of Issuance 2024 Description of Property THAT CERTAIN CONDOMINIUM PARCEL COMPOSED OF UNIT NUMBER 401 AND AN UNDIVIDED PERCENTAGE SHARE IN THOSE COMMON ELEMENTS APPURTENANT THERETO IN ACCORDANCE WITH AND SUBJECT TO THE COVENANTS, CONDITIONS, RESTRICTIONS, TERMS AND OTHER PROVISIONS OF THE DECLARATION OF CONDOMINIUM OF THE HERON COACH HOUSES, A PHASE CONDOMINIUM, AS RECORDED IN OFFICIAL RECORD BOOK 2140 AT PAGES 1789 THROUGH 1877 INCLUSIVE, AS AMENDED IN OFFICIAL RECORD BOOK 2168 AT PAGE 1153, OFFICIAL RECORD BOOK 2201 AT PAGE 3462, OFFICIAL RECORD BOOK 2231 AT PAGE 0442, OFFICIAL RECORD BOOK 2294 AT PAGE 2583, AND OFFICIAL RECORD BOOK 2338 AT PAGE 4109, AND FURTHER RECORDED IN CONDOMINIUM PLAT BOOK 17, PAGES 72-75 INCLUSIVE, PUBLIC RECORDS OF LEE COUNTY, FLORIDA Strap Number 02-46-24-04-00000.4010

Names in which assessed:
MADELYN J LACARRUBBA, MADELYN JAYE LACARRUBBA

All of said property being in the County of Lee, State of Florida. Unless such certificate(s) shall be redeemed according to the law the property described in such certificate(s) will be sold to the highest bidder online at www.lee.realtaxdeed.com on 12/08/2026 at 10:00 am, by Kevin C. Karnes, Lee County Clerk of the Circuit Court & Comptroller.

Oct. 16, 23, 30; Nov. 6, 2026
26-04357L

PUBLISH YOUR LEGAL NOTICE
Email
legal@businessobserverfl.com
FLORIDA'S NEWSPAPER FOR THE C-SUITE
Business Observer
LV20878_V7

--- TAX DEEDS ---

FIRST INSERTION

NOTICE OF APPLICATION FOR TAX DEED
Section 197.512 F.S.

Tax Deed #:2026000876

NOTICE IS HEREBY GIVEN that ATCF II Florida-A LLC the holder of the following certificate(s) has filed said certificate(s) for a tax deed to be issued thereon. The certificate number(s), year(s) of issuance, the description of the property and the name(s) in which it was assessed are as follows:

Certificate Number: 24-05310 Year of Issuance 2024 Description of Property LOTS 1 AND 2, BLOCK 5775, CAPE CORAL SUBDIVISION, UNIT 88, AS RECORDED IN PLAT BOOK 24, PAGES 127 THROUGH 143, INCLUSIVE, OF THE PUBLIC RECORDS OF LEE COUNTY, FLORIDA Strap Number 17-43-24-C1-05775.0010

Names in which assessed:
MURIV LLC

All of said property being in the County of Lee, State of Florida. Unless such certificate(s) shall be redeemed according to the law the property described in such certificate(s) will be sold to the highest bidder online at www.lee.realtaxdeed.com on 12/08/2026 at 10:00 am, by Kevin C. Karnes, Lee County Clerk of the Circuit Court & Comptroller.

Oct. 16, 23, 30; Nov. 6, 2026
26-04367L

FIRST INSERTION

NOTICE OF APPLICATION FOR TAX DEED
Section 197.512 F.S.

Tax Deed #:2026000886

NOTICE IS HEREBY GIVEN that ATCF II Florida-A LLC the holder of the following certificate(s) has filed said certificate(s) for a tax deed to be issued thereon. The certificate number(s), year(s) of issuance, the description of the property and the name(s) in which it was assessed are as follows:

Certificate Number: 24-10634 Year of Issuance 2024 Description of Property LOT 20, BLOCK A, PALM TERRACE, ACCORDING TO THE MAP OR PLAT THEREOF AS RECORDED IN PLAT BOOK 34, PAGES 28 AND 29, OF THE PUBLIC RECORDS OF LEE COUNTY, FLORIDA. Strap Number 17-44-25-P1-0250A.0200

Names in which assessed:
DERGM WORK LLC

All of said property being in the County of Lee, State of Florida. Unless such certificate(s) shall be redeemed according to the law the property described in such certificate(s) will be sold to the highest bidder online at www.lee.realtaxdeed.com on 12/08/2026 at 10:00 am, by Kevin C. Karnes, Lee County Clerk of the Circuit Court & Comptroller.

Oct. 16, 23, 30; Nov. 6, 2026
26-04371L

FIRST INSERTION

NOTICE OF APPLICATION FOR TAX DEED
Section 197.512 F.S.

Tax Deed #:2026000902

NOTICE IS HEREBY GIVEN that ATCF II Florida-A LLC the holder of the following certificate(s) has filed said certificate(s) for a tax deed to be issued thereon. The certificate number(s), year(s) of issuance, the description of the property and the name(s) in which it was assessed are as follows:

Certificate Number: 24-10969 Year of Issuance 2024 Description of Property LOTS 1, 2, 23 AND 24, BLOCK 17, CITY VIEW PARK NO. 3, ACCORDING TO THE PLAT THEREOF, AS RECORDED IN PLAT BOOK 6, PAGE 32, OF THE PUBLIC RECORDS OF LEE COUNTY, FLORIDA. Strap Number 19-44-25-P3-00917.0010

Names in which assessed:
SOUTHAM, LLC

All of said property being in the County of Lee, State of Florida. Unless such certificate(s) shall be redeemed according to the law the property described in such certificate(s) will be sold to the highest bidder online at www.lee.realtaxdeed.com on 12/08/2026 at 10:00 am, by Kevin C. Karnes, Lee County Clerk of the Circuit Court & Comptroller.

Oct. 16, 23, 30; Nov. 6, 2026
26-04374L

FIRST INSERTION

NOTICE OF APPLICATION FOR TAX DEED
Section 197.512 F.S.

Tax Deed #:2026000864

NOTICE IS HEREBY GIVEN that ATCF II Florida-A LLC the holder of the following certificate(s) has filed said certificate(s) for a tax deed to be issued thereon. The certificate number(s), year(s) of issuance, the description of the property and the name(s) in which it was assessed are as follows:

Certificate Number: 24-03547 Year of Issuance 2024 Description of Property LOTS 37 AND 38, BLOCK 1125, UNIT 23, CAPE CORAL SUBDIVISION, AS RECORDED IN PLAT BOOK 14, PAGES 39 TO 52, IN THE PUBLIC RECORDS OF LEE COUNTY, FLORIDA. Strap Number 13-44-23-C2-01125.0370

Names in which assessed:
CECELIA LASTRA, JOSE EDWARDO NUNEZ ROJAS

All of said property being in the County of Lee, State of Florida. Unless such certificate(s) shall be redeemed according to the law the property described in such certificate(s) will be sold to the highest bidder online at www.lee.realtaxdeed.com on 12/08/2026 at 10:00 am, by Kevin C. Karnes, Lee County Clerk of the Circuit Court & Comptroller.

Oct. 16, 23, 30; Nov. 6, 2026
26-04359L

FIRST INSERTION

NOTICE OF APPLICATION FOR TAX DEED
Section 197.512 F.S.

Tax Deed #:2026000877

NOTICE IS HEREBY GIVEN that ATCF II Florida-A LLC the holder of the following certificate(s) has filed said certificate(s) for a tax deed to be issued thereon. The certificate number(s), year(s) of issuance, the description of the property and the name(s) in which it was assessed are as follows:

Certificate Number: 24-05320 Year of Issuance 2024 Description of Property LOTS 14 AND 15, BLOCK 5818, CAPE CORAL UNIT 88, A SUBDIVISION, ACCORDING TO THE PLAT THEREOF, AS RECORDED IN PLAT BOOK 24, PAGES 127 THROUGH 143, OF THE PUBLIC RECORDS OF LEE COUNTY, FLORIDA. Strap Number 17-43-24-C1-05818.0140

Names in which assessed:
Hector Alfaro

All of said property being in the County of Lee, State of Florida. Unless such certificate(s) shall be redeemed according to the law the property described in such certificate(s) will be sold to the highest bidder online at www.lee.realtaxdeed.com on 12/08/2026 at 10:00 am, by Kevin C. Karnes, Lee County Clerk of the Circuit Court & Comptroller.

Oct. 16, 23, 30; Nov. 6, 2026
26-04369L

FIRST INSERTION

NOTICE OF APPLICATION FOR TAX DEED
Section 197.512 F.S.

Tax Deed #:2026000833

NOTICE IS HEREBY GIVEN that ATCF II Florida-A LLC the holder of the following certificate(s) has filed said certificate(s) for a tax deed to be issued thereon. The certificate number(s), year(s) of issuance, the description of the property and the name(s) in which it was assessed are as follows:

Certificate Number: 24-06853 Year of Issuance 2024 Description of Property LOTS 48 AND 49, BLOCK 2067, CAPE CORAL, UNIT 31, ACCORDING TO THE PLAT THEREOF, RECORDED IN PLAT BOOK 14, PAGE 149 THROUGH 165, OF THE PUBLIC RECORDS OF LEE COUNTY, FLORIDA. Strap Number 06-44-24-C2-02067.0480

Names in which assessed:
TS 401K PLAN & TRUST

All of said property being in the County of Lee, State of Florida. Unless such certificate(s) shall be redeemed according to the law the property described in such certificate(s) will be sold to the highest bidder online at www.lee.realtaxdeed.com on 12/08/2026 at 10:00 am, by Kevin C. Karnes, Lee County Clerk of the Circuit Court & Comptroller.

Oct. 16, 23, 30; Nov. 6, 2026
26-04375L

FIRST INSERTION

NOTICE OF APPLICATION FOR TAX DEED
Section 197.512 F.S.

Tax Deed #:2026000893

NOTICE IS HEREBY GIVEN that ATCF II Florida-A LLC the holder of the following certificate(s) has filed said certificate(s) for a tax deed to be issued thereon. The certificate number(s), year(s) of issuance, the description of the property and the name(s) in which it was assessed are as follows:

Certificate Number: 24-03839 Year of Issuance 2024 Description of Property LOTS 3 AND 4, BLOCK 5333, CAPE CORAL UNIT 58, ACCORDING TO THE PLAT THEREOF AS RECORDED IN PLAT BOOK 23, PAGES 128 THROUGH 147, INCLUSIVE, OF THE PUBLIC RECORDS OF LEE COUNTY, FLORIDA. Strap Number 18-44-23-C3-05333.0030

Names in which assessed:
CORAL OM ONE FLORIDA, CORAL OM ONE FLORIDA LLC

All of said property being in the County of Lee, State of Florida. Unless such certificate(s) shall be redeemed according to the law the property described in such certificate(s) will be sold to the highest bidder online at www.lee.realtaxdeed.com on 12/08/2026 at 10:00 am, by Kevin C. Karnes, Lee County Clerk of the Circuit Court & Comptroller.

Oct. 16, 23, 30; Nov. 6, 2026
26-04373L

FIRST INSERTION

NOTICE OF APPLICATION FOR TAX DEED
Section 197.512 F.S.

Tax Deed #:2026000892

NOTICE IS HEREBY GIVEN that ATCF II Florida-A LLC the holder of the following certificate(s) has filed said certificate(s) for a tax deed to be issued thereon. The certificate number(s), year(s) of issuance, the description of the property and the name(s) in which it was assessed are as follows:

Certificate Number: 24-03800 Year of Issuance 2024 Description of Property LOTS 7 AND 8, BLOCK 5312, CAPE CORAL UNIT 58, ACCORDING TO THE PLAT THEREOF AS RECORDED IN PLAT BOOK 23, PAGES 128 THROUGH 147, INCLUSIVE, OF THE PUBLIC RECORDS OF LEE COUNTY, FLORIDA. Strap Number 18-44-23-C1-05312.0070

Names in which assessed:
BONA QUALITY CONSTRUCTION INC., BONA QUALITY CONSTRUCTION, INC.

All of said property being in the County of Lee, State of Florida. Unless such certificate(s) shall be redeemed according to the law the property described in such certificate(s) will be sold to the highest bidder online at www.lee.realtaxdeed.com on 12/08/2026 at 10:00 am, by Kevin C. Karnes, Lee County Clerk of the Circuit Court & Comptroller.

Oct. 16, 23, 30; Nov. 6, 2026
26-04372L

FIRST INSERTION

NOTICE OF APPLICATION FOR TAX DEED
Section 197.512 F.S.

Tax Deed #:2026000882

NOTICE IS HEREBY GIVEN that ATCF II Florida-A LLC the holder of the following certificate(s) has filed said certificate(s) for a tax deed to be issued thereon. The certificate number(s), year(s) of issuance, the description of the property and the name(s) in which it was assessed are as follows:

Certificate Number: 24-03724 Year of Issuance 2024 Description of Property LOTS 9 AND 10, BLOCK 3954, UNIT 54, CAPE CORAL SUBDIVISION, ACCORDING TO THE PLAT THEREOF, RECORDED IN PLAT BOOK 19, PAGES 79 THROUGH 91, INCLUSIVE, PUBLIC RECORDS OF LEE COUNTY, FLORIDA. Strap Number 17-44-23-C1-03954.0090

Names in which assessed:
DILSIA M SMITH, DILSIA M. SMITH

All of said property being in the County of Lee, State of Florida. Unless such certificate(s) shall be redeemed according to the law the property described in such certificate(s) will be sold to the highest bidder online at www.lee.realtaxdeed.com on 12/08/2026 at 10:00 am, by Kevin C. Karnes, Lee County Clerk of the Circuit Court & Comptroller.

Oct. 16, 23, 30; Nov. 6, 2026
26-04370L

SUBSCRIBE TO THE BUSINESS OBSERVER
Call: (941) 362-4848 or go to: www.businessobserverfl.com
Business Observer
LV4769

--- TAX DEEDS ---

FIRST INSERTION

NOTICE OF APPLICATION FOR TAX DEED
Section 197.512 F.S.

Tax Deed #:2026000868

NOTICE IS HEREBY GIVEN that ATCF II Florida-A LLC the holder of the following certificate(s) has filed said certificate(s) for a tax deed to be issued thereon. The certificate number(s), year(s) of issuance, the description of the property and the name(s) in which it was assessed are as follows:

Certificate Number: 24-03592 Year of Issuance 2024 Description of Property UNIT NO. 101, COLONIAL VILLAGE II CONDOMINIUM, A CONDOMINIUM ACCORDING TO THE DECLARATION OF CONDOMINIUM THEREOF RECORDED NOVEMBER 16, 1983 IN OFFICIAL RECORD BOOK 1698, PAGES 2508 THRU 2561, AND ALL AMENDMENTS THERETO IN THE PUBLIC RECORDS OF LEE COUNTY, FLORIDA; TOGETHER WITH ALL OF THE APPURTENANCES THEREUNTO APPERTAINING AND SPECIFIED IN SAID DECLARATION OF CONDOMINIUM. Strap Number 14-44-23-C3-00100.1010

Names in which assessed:
MARY E VALERI, MARYELLEN VALERI, THOMAS J VALERI JR, THOMAS J. VALERI JR

All of said property being in the County of Lee, State of Florida. Unless such certificate(s) shall be redeemed according to the law the property described in such certificate(s) will be sold to the highest bidder online at www.lee.realtaxdeed.com on 12/08/2026 at 10:00 am, by Kevin C. Karnes, Lee County Clerk of the Circuit Court & Comptroller.

Oct. 16, 23, 30; Nov. 6, 2026
26-04362L

FIRST INSERTION

NOTICE OF APPLICATION FOR TAX DEED
Section 197.512 F.S.

Tax Deed #:2026000867

NOTICE IS HEREBY GIVEN that ATCF II Florida-A LLC the holder of the following certificate(s) has filed said certificate(s) for a tax deed to be issued thereon. The certificate number(s), year(s) of issuance, the description of the property and the name(s) in which it was assessed are as follows:

Certificate Number: 24-04699 Year of Issuance 2024 Description of Property LOTS 76 AND 77, BLOCK 98, UNIT 2, PART 2, CAPE CORAL SUBDIVISION, A SUBDIVISION, ACCORDING TO THE PLAT THEREOF RECORDED IN PLAT BOOK 11, PAGES 96 THROUGH 98, IN THE PUBLIC RECORDS OF LEE COUNTY, FLORIDA. Strap Number 13-45-23-C1-00098.0760

Names in which assessed:
KAYOL CAETANO

All of said property being in the County of Lee, State of Florida. Unless such certificate(s) shall be redeemed according to the law the property described in such certificate(s) will be sold to the highest bidder online at www.lee.realtaxdeed.com on 12/08/2026 at 10:00 am, by Kevin C. Karnes, Lee County Clerk of the Circuit Court & Comptroller.

Oct. 16, 23, 30; Nov. 6, 2026
26-04361L

FIRST INSERTION

NOTICE OF APPLICATION FOR TAX DEED
Section 197.512 F.S.

Tax Deed #:2026000816

NOTICE IS HEREBY GIVEN that ATCF II Florida-A LLC the holder of the following certificate(s) has filed said certificate(s) for a tax deed to be issued thereon. The certificate number(s), year(s) of issuance, the description of the property and the name(s) in which it was assessed are as follows:

Certificate Number: 24-02635 Year of Issuance 2024 Description of Property LOTS 9 AND 10, BLOCK 2880, UNIT 41, CAPE CORAL SUBDIVISION, ACCORDING TO THE MAP OR PLAT THEREOF AS RECORDED IN PLAT BOOK 17, PAGES 2 THROUGH 14, PUBLIC RECORDS OF LEE COUNTY, FLORIDA Strap Number 03-44-23-C2-02880.0090

Names in which assessed:
AMY E BIAVATI, ANDREW H ESHAM JR, ESHAM BIAVATI, THE DAVIS REVOCABLE TRUST DATED MARCH 20, 2023

All of said property being in the County of Lee, State of Florida. Unless such certificate(s) shall be redeemed according to the law the property described in such certificate(s) will be sold to the highest bidder online at www.lee.realtaxdeed.com on 12/08/2026 at 10:00 am, by Kevin C. Karnes, Lee County Clerk of the Circuit Court & Comptroller.

Oct. 16, 23, 30; Nov. 6, 2026
26-04368L

FIRST INSERTION

NOTICE OF APPLICATION FOR TAX DEED
Section 197.512 F.S.

Tax Deed #:2026000870

NOTICE IS HEREBY GIVEN that ATCF II Florida-A LLC the holder of the following certificate(s) has filed said certificate(s) for a tax deed to be issued thereon. The certificate number(s), year(s) of issuance, the description of the property and the name(s) in which it was assessed are as follows:

Certificate Number: 24-03598 Year of Issuance 2024 Description of Property UNIT NO. 108, COLONIAL VILLAGE II CONDOMINIUM, A CONDOMINIUM ACCORDING TO THE DECLARATION OF CONDOMINIUM THEREOF RECORDED NOVEMBER 16, 1983 IN OFFICIAL RECORD BOOK 1698, PAGES 2508 TO 2561, INCLUSIVE, AND ALL AMENDMENTS THERETO IN PUBLIC RECORDS OF LEE COUNTY, FLORIDA; TOGETHER WITH ALL OF THE APPURTENANCES THEREUNTO APPERTAINING AND SPECIFIED IN SAID DECLARATION OF CONDOMINIUM. Strap Number 14-44-23-C3-00100.1080

Names in which assessed:
MARYELLEN VALERI, THOMAS J VALERI JR, THOMAS J. VALERI JR

All of said property being in the County of Lee, State of Florida. Unless such certificate(s) shall be redeemed according to the law the property described in such certificate(s) will be sold to the highest bidder online at www.lee.realtaxdeed.com on 12/08/2026 at 10:00 am, by Kevin C. Karnes, Lee County Clerk of the Circuit Court & Comptroller.

Oct. 16, 23, 30; Nov. 6, 2026
26-04364L

FIRST INSERTION

NOTICE OF APPLICATION FOR TAX DEED
Section 197.512 F.S.

Tax Deed #:2026000808

NOTICE IS HEREBY GIVEN that ATCF II Florida-A LLC the holder of the following certificate(s) has filed said certificate(s) for a tax deed to be issued thereon. The certificate number(s), year(s) of issuance, the description of the property and the name(s) in which it was assessed are as follows:

Certificate Number: 24-06623 Year of Issuance 2024 Description of Property LOTS 2, 3, 4, 5 AND 75, AND TRACT A BAYSHORE MANOR, TAMIAMI ESTATES, ACCORDING TO THE PLAT THEREOF, AS RECORDED IN PLAT BOOK 7, PAGE 44, OF THE PUBLIC RECORDS OF LEE COUNTY, FLORIDA. Strap Number 01-44-24-02-00000.0020

Names in which assessed:
ESPERANZA BARRUETA ARIAS

All of said property being in the County of Lee, State of Florida. Unless such certificate(s) shall be redeemed according to the law the property described in such certificate(s) will be sold to the highest bidder online at www.lee.realtaxdeed.com on 12/08/2026 at 10:00 am, by Kevin C. Karnes, Lee County Clerk of the Circuit Court & Comptroller.

Oct. 16, 23, 30; Nov. 6, 2026
26-04383L

FIRST INSERTION

NOTICE OF APPLICATION FOR TAX DEED
Section 197.512 F.S.

Tax Deed #:2026000858

NOTICE IS HEREBY GIVEN that ATCF II Florida-A LLC the holder of the following certificate(s) has filed said certificate(s) for a tax deed to be issued thereon. The certificate number(s), year(s) of issuance, the description of the property and the name(s) in which it was assessed are as follows:

Certificate Number: 24-07113 Year of Issuance 2024 Description of Property LOTS 69, 70, 71, 72, AND 73, BLOCK C, CABANA CITY, A SUBDIVISION ACCORDING TO THE PLAT THEREOF RECORDED AT PLAT BOOK 8, PAGES 61 AND 61A, IN THE PUBLIC RECORDS OF LEE COUNTY, FLORIDA Strap Number 11-44-24-01-0000C.0690

Names in which assessed:
ANTONIA THEMISTOCLEOUS TRUST, REVOCABLE TRUST AGREEMENT OF ANTONIA THEMISTOCLEOUS UTD 10/06/2021

All of said property being in the County of Lee, State of Florida. Unless such certificate(s) shall be redeemed according to the law the property described in such certificate(s) will be sold to the highest bidder online at www.lee.realtaxdeed.com on 12/08/2026 at 10:00 am, by Kevin C. Karnes, Lee County Clerk of the Circuit Court & Comptroller.

Oct. 16, 23, 30; Nov. 6, 2026
26-04381L

FIRST INSERTION

NOTICE OF APPLICATION FOR TAX DEED
Section 197.512 F.S.

Tax Deed #:2026000870

NOTICE IS HEREBY GIVEN that ATCF II Florida-A LLC the holder of the following certificate(s) has filed said certificate(s) for a tax deed to be issued thereon. The certificate number(s), year(s) of issuance, the description of the property and the name(s) in which it was assessed are as follows:

Certificate Number: 24-03598 Year of Issuance 2024 Description of Property UNIT NO. 108, COLONIAL VILLAGE II CONDOMINIUM, A CONDOMINIUM ACCORDING TO THE DECLARATION OF CONDOMINIUM THEREOF RECORDED NOVEMBER 16, 1983 IN OFFICIAL RECORD BOOK 1698, PAGES 2508 TO 2561, INCLUSIVE, AND ALL AMENDMENTS THERETO IN PUBLIC RECORDS OF LEE COUNTY, FLORIDA; TOGETHER WITH ALL OF THE APPURTENANCES THEREUNTO APPERTAINING AND SPECIFIED IN SAID DECLARATION OF CONDOMINIUM. Strap Number 14-44-23-C3-00100.1080

Names in which assessed:
MARYELLEN VALERI, THOMAS J VALERI JR, THOMAS J. VALERI JR

All of said property being in the County of Lee, State of Florida. Unless such certificate(s) shall be redeemed according to the law the property described in such certificate(s) will be sold to the highest bidder online at www.lee.realtaxdeed.com on 12/08/2026 at 10:00 am, by Kevin C. Karnes, Lee County Clerk of the Circuit Court & Comptroller.

Oct. 16, 23, 30; Nov. 6, 2026
26-04365L

FIRST INSERTION

NOTICE OF APPLICATION FOR TAX DEED
Section 197.512 F.S.

Tax Deed #:2026000861

NOTICE IS HEREBY GIVEN that ATCF II Florida-A LLC the holder of the following certificate(s) has filed said certificate(s) for a tax deed to be issued thereon. The certificate number(s), year(s) of issuance, the description of the property and the name(s) in which it was assessed are as follows:

Certificate Number: 24-04641 Year of Issuance 2024 Description of Property LOTS 15 AND 16, BLOCK 251, UNIT 9, CAPE CORAL SUBDIVISION, ACCORDING TO THE PLAT THEREOF AS RECORDED IN PLAT BOOK 13, PAGES 7 TO 18, INCLUSIVE, IN THE PUBLIC RECORDS OF LEE COUNTY, FLORIDA. Strap Number 12-45-23-C1-00251.0150

Names in which assessed:
DEEMARIE LANGO

All of said property being in the County of Lee, State of Florida. Unless such certificate(s) shall be redeemed according to the law the property described in such certificate(s) will be sold to the highest bidder online at www.lee.realtaxdeed.com on 12/08/2026 at 10:00 am, by Kevin C. Karnes, Lee County Clerk of the Circuit Court & Comptroller.

Oct. 16, 23, 30; Nov. 6, 2026
26-04382L

FIRST INSERTION

NOTICE OF APPLICATION FOR TAX DEED
Section 197.512 F.S.

Tax Deed #:2026000826

NOTICE IS HEREBY GIVEN that ATCF II Florida-A LLC the holder of the following certificate(s) has filed said certificate(s) for a tax deed to be issued thereon. The certificate number(s), year(s) of issuance, the description of the property and the name(s) in which it was assessed are as follows:

Certificate Number: 24-09129 Year of Issuance 2024 Description of Property LOT 5, BLOCK 23, SAIL HARBOUR AT HEALTHPARK, A SUBDIVISION ACCORDING TO THE MAP OR PLAT THEREOF, RECORDED UNDER INSTRUMENT #2005000068039, IN THE PUBLIC RECORDS OF LEE COUNTY, FLORIDA Strap Number 04-46-24-17-00023.0050

Names in which assessed:
JEFFREY J & SHERI L HOYNE TRUST, THE JEFFREY J. HOYNE AND SHERI L. HOYNE LIVING TRUST DATED DECEMBER 3, 2020

All of said property being in the County of Lee, State of Florida. Unless such certificate(s) shall be redeemed according to the law the property described in such certificate(s) will be sold to the highest bidder online at www.lee.realtaxdeed.com on 12/08/2026 at 10:00 am, by Kevin C. Karnes, Lee County Clerk of the Circuit Court & Comptroller.

Oct. 16, 23, 30; Nov. 6, 2026
26-04377L

FIRST INSERTION

NOTICE OF APPLICATION FOR TAX DEED
Section 197.512 F.S.

Tax Deed #:2026000854

NOTICE IS HEREBY GIVEN that ATCF II Florida-A LLC the holder of the following certificate(s) has filed said certificate(s) for a tax deed to be issued thereon. The certificate number(s), year(s) of issuance, the description of the property and the name(s) in which it was assessed are as follows:

Certificate Number: 24-12094 Year of Issuance 2024 Description of Property CONDOMINIUM UNIT 7103, BUILDING 7, THE TIDES AT PELICAN LANDING CONDOMINIUM, A CONDOMINIUM, ACCORDING TO THE DECLARATION OF CONDOMINIUM THEREOF RECORDED IN OFFICIAL RECORDS BOOK 4640, PAGES 620 THROUGH 776, TOGETHER WITH AN UNDIVIDED INTEREST IN THE COMMON ELEMENTS APPURTENANT THERETO, AS AMENDED FROM TIME TO TIME, OF THE PUBLIC RECORDS OF LEE COUNTY, FLORIDA. Strap Number 09-47-25-E4-33007.0103

Names in which assessed:
RAYMOND ALCE

All of said property being in the County of Lee, State of Florida. Unless such certificate(s) shall be redeemed according to the law the property described in such certificate(s) will be sold to the highest bidder online at www.lee.realtaxdeed.com on 12/08/2026 at 10:00 am, by Kevin C. Karnes, Lee County Clerk of the Circuit Court & Comptroller.

Oct. 16, 23, 30; Nov. 6, 2026
26-04379L

FIRST INSERTION

NOTICE OF APPLICATION FOR TAX DEED
Section 197.512 F.S.

Tax Deed #:2026000817

NOTICE IS HEREBY GIVEN that ATCF II Florida-A LLC the holder of the following certificate(s) has filed said certificate(s) for a tax deed to be issued thereon. The certificate number(s), year(s) of issuance, the description of the property and the name(s) in which it was assessed are as follows:

Certificate Number: 24-02678 Year of Issuance 2024 Description of Property LOTS 31 AND 32, BLOCK 2860, UNIT 41, CAPE CORAL, ACCORDING TO THE PLAT THEREOF RECORDED IN PLAT BOOK 17, PAGE 2-14, OF THE PUBLIC RECORDS OF LEE COUNTY, FLORIDA. Strap Number 03-44-23-C3-02860.0310

Names in which assessed:
JOSEF KRAUS

All of said property being in the County of Lee, State of Florida. Unless such certificate(s) shall be redeemed according to the law the property described in such certificate(s) will be sold to the highest bidder online at www.lee.realtaxdeed.com on 12/08/2026 at 10:00 am, by Kevin C. Karnes, Lee County Clerk of the Circuit Court & Comptroller.

Oct. 16, 23, 30; Nov. 6, 2026
26-04376L

FIRST INSERTION

NOTICE OF APPLICATION FOR TAX DEED
Section 197.512 F.S.

Tax Deed #:2026000853

NOTICE IS HEREBY GIVEN that ATCF II Florida-A LLC the holder of the following certificate(s) has filed said certificate(s) for a tax deed to be issued thereon. The certificate number(s), year(s) of issuance, the description of the property and the name(s) in which it was assessed are as follows:

Certificate Number: 24-11299 Year of Issuance 2024 Description of Property UNIT 1204, PASEO, A CONDOMINIUM ACCORDING TO THE DECLARATION OF CONDOMINIUM THEREOF RECORDED IN OFFICIAL RECORDS INSTRUMENT NO. 2007000131860, OF THE PUBLIC RECORDS OF LEE COUNTY, FLORIDA, AND ANY AMENDMENTS THERETO, TOGETHER WITH ITS UNDIVIDED SHARE IN THE COMMON ELEMENTS Strap Number 09-45-25-P4-00200.1204

Names in which assessed:
CRAIG P KEANE, CRAIG PATRICK KEANE

All of said property being in the County of Lee, State of Florida. Unless such certificate(s) shall be redeemed according to the law the property described in such certificate(s) will be sold to the highest bidder online at www.lee.realtaxdeed.com on 12/08/2026 at 10:00 am, by Kevin C. Karnes, Lee County Clerk of the Circuit Court & Comptroller.

Oct. 16, 23, 30; Nov. 6, 2026
26-04378L

FIRST INSERTION

NOTICE OF APPLICATION FOR TAX DEED
Section 197.512 F.S.

Tax Deed #:2026000862

NOTICE IS HEREBY GIVEN that ATCF II Florida-A LLC the holder of the following certificate(s) has filed said certificate(s) for a tax deed to be issued thereon. The certificate number(s), year(s) of issuance, the description of the property and the name(s) in which it was assessed are as follows:

Certificate Number: 24-22866 Year of Issuance 2024 Description of Property LOT 6, BLOCK 29, UNIT 6, LEHIGH ACRES, A SUBDIVISION OF SECTION 12, TOWNSHIP 45 SOUTH, RANGE 27 EAST, ACCORDING TO THE PLAT THEREOF, AS RECORDED IN PLAT BOOK 15, PAGE 228, OF THE PUBLIC RECORDS OF LEE COUNTY, FLORIDA. Strap Number 12-45-27-L1-06029.0060

Names in which assessed:
MELISSA KELEMEN TRUST, THE FAMILY TRUST OF MELISSA KELEMEN

All of said property being in the County of Lee, State of Florida. Unless such certificate(s) shall be redeemed according to the law the property described in such certificate(s) will be sold to the highest bidder online at www.lee.realtaxdeed.com on 12/08/2026 at 10:00 am, by Kevin C. Karnes, Lee County Clerk of the Circuit Court & Comptroller.

Oct. 16, 23, 30; Nov. 6, 2026
26-04358L

FIRST INSERTION

NOTICE OF APPLICATION FOR TAX DEED
Section 197.512 F.S.

Tax Deed #:2026000873

NOTICE IS HEREBY GIVEN that ATCF II Florida-A LLC the holder of the following certificate(s) has filed said certificate(s) for a tax deed to be issued thereon. The certificate number(s), year(s) of issuance, the description of the property and the name(s) in which it was assessed are as follows:

Certificate Number: 24-08568 Year of Issuance 2024 Description of Property UNIT 1148, BUILDING 4, CALOOSA BAYVIEW CONDOMINIUM PHASE A, A CONDOMINIUM, ALL AS SET FORTH IN THE DECLARATION OF CONDOMINIUM AND THE EXHIBITS ATTACHED THERETO AND FORMING A PART THEREOF, AS RECORDED IN OFFICIAL RECORDS BOOK 1024, PAGE 205, AND ALL AMENDMENTS THERETO, OF THE PUBLIC RECORDS OF LEE COUNTY, FLORIDA. THE ABOVE DESCRIPTION INCLUDES, BUT IS NOT LIMITED TO, ALL APPURTENANCES TO THE CONDOMINIUM UNIT ABOVE DESCRIBED. INCLUDING THE UNDIVIDED INTEREST IN THE COMMON ELEMENTS OF SAID CONDOMINIUM. Strap Number 16-45-24-21-00004.1148

Names in which assessed:
MICHAEL R MEYER

All of said property being in the County of Lee, State of Florida. Unless such certificate(s) shall be redeemed according to the law the property described in such certificate(s) will be sold to the highest bidder online at www.lee.realtaxdeed.com on 12/08/2026 at 10:00 am, by Kevin C. Karnes, Lee County Clerk of the Circuit Court & Comptroller.

Oct. 16, 23, 30; Nov. 6, 2026
26-04366L

FIRST INSERTION

NOTICE OF APPLICATION FOR TAX DEED
Section 197.512 F.S.

Tax Deed #:2026000866

NOTICE IS HEREBY GIVEN that ATCF II Florida-A LLC the holder of the following certificate(s) has filed said certificate(s) for a tax deed to be issued thereon. The certificate number(s), year(s) of issuance, the description of the property and the name(s) in which it was assessed are as follows:

Certificate Number: 24-07184 Year of Issuance 2024 Description of Property EVANS JAMES HMSTD. BLK 17 PB1/23 DESC OR 1900 /1961 LES R/W OR 2272/2067 Strap Number 13-44-24-P3-00417.0030

Names in which assessed:
BRIGITTE HEINDL, JOSE BASERVA, JOSE M AGUIAR, JOSE M. AGUIAR JR., ZORAIDA AGUIAR

All of said property being in the County of Lee, State of Florida. Unless such certificate(s) shall be redeemed according to the law the property described in such certificate(s) will be sold to the highest bidder online at www.lee.realtaxdeed.com on 12/08/2026 at 10:00 am, by Kevin C. Karnes, Lee County Clerk of the Circuit Court & Comptroller.

Oct. 16, 23, 30; Nov. 6, 2026
26-04360L

FIRST INSERTION

NOTICE OF APPLICATION FOR TAX DEED
Section 197.512 F.S.

Tax Deed #:2026000855

NOTICE IS HEREBY GIVEN that ATCF II Florida-A LLC the holder of the following certificate(s) has filed said certificate(s) for a tax deed to be issued thereon. The certificate number(s), year(s) of issuance, the description of the property and the name(s) in which it was assessed are as follows:

Certificate Number: 24-07096 Year of Issuance 2024 Description of Property UNIT B-6 OF MARINA TOWN APARTMENTS 1 CONDOMINIUM, ACCORDING TO THE DECLARATION OF CONDOMINIUM THEREOF ON FILE AND RECORDED IN OFFICIAL RECORDS BOOK 1316, PAGES 460 THROUGH 536, PUBLIC RECORDS OF LEE COUNTY, FLORIDA Strap Number 10-44-24-14-0000B.0060

Names in which assessed:
DONALD BRANDT, Donald H Brandt

All of said property being in the County of Lee, State of Florida. Unless such certificate(s) shall be redeemed according to the law the property described in such certificate(s) will be sold to the highest bidder online at www.lee.realtaxdeed.com on 12/08/2026 at 10:00 am, by Kevin C. Karnes, Lee County Clerk of the Circuit Court & Comptroller.

Oct. 16, 23, 30; Nov. 6, 2026
26-04380L

FIRST INSERTION

NOTICE OF APPLICATION FOR TAX DEED
Section 197.512 F.S.

Tax Deed #:2026000869

NOTICE IS HEREBY GIVEN that ATCF II Florida-A LLC the holder of the following certificate(s) has filed said certificate(s) for a tax deed to be issued thereon. The certificate number(s), year(s) of issuance, the description of the property and the name(s) in which it was assessed are as follows:

Certificate Number: 24-03594 Year of Issuance 2024 Description of Property UNIT #103, COLONIAL VILLAGE II CONDOMINIUM, A CONDOMINIUM ACCORDING TO THE DECLARATION OF CONDOMINIUM THEREOF, RECORDED NOVEMBER 16, 1983 IN OFFICIAL RECORDS BOOK 1698, PAGES 2508 THROUGH 2561, INCLUSIVE, AND ALL AMENDMENTS THERETO IN THE PUBLIC RECORDS OF LEE COUNTY, FLORIDA; TOGETHER WITH ALL OF THE APPURTENANCES THEREUNTO APPERTATAINING AND SPECIFIED IN SAID DECLARATION OF CONDOMINIUM. Strap Number 14-44-23-C3-00100.1030

Names in which assessed:
MARYELLEN VALERI, THOMAS J VALERI JR, THOMAS J. VALERI JR

All of said property being in the County of Lee, State of Florida. Unless such certificate(s) shall be redeemed according to the law the property described in such certificate(s) will be sold to the highest bidder online at www.lee.realtaxdeed.com on 12/08/2026 at 10:00 am, by Kevin C. Karnes, Lee County Clerk of the Circuit Court & Comptroller.

Oct. 16, 23, 30; Nov. 6, 2026
26-04363L

--- ESTATE ---

FIRST INSERTION

NOTICE TO CREDITORS
IN THE CIRCUIT COURT OF THE TWENTIETH JUDICIAL CIRCUIT IN AND FOR LEE COUNTY, FLORIDA
PROBATE DIVISION
CASE NO. 26-CP-002695
DIVISION: P(7)
IN RE: ESTATE OF MARYANNE CHRISTINE RADJEWSKI, Deceased.

The administration of the Estate of Maryanne Christine Radjewski, deceased, whose date of death was 11/27/2025, is pending in the Circuit Court for Lee County, Florida, Probate Division, the address of which is PO Box 9346, Fort Myers, FL 33902. The names and addresses of the personal representative and the personal representative's attorney are set forth below.

All creditors of the decedent and other persons having claims or demands against decedent's estate on whom a copy of this notice is required to be served must file their claims with this court WITHIN THE LATER OF 3 MONTHS AFTER THE TIME OF THE FIRST PUBLICATION OF THIS NOTICE OR 30 DAYS AFTER THE DATE OF SERVICE OF A COPY OF THIS NOTICE ON THEM.

All other creditors of the decedent and other persons having claims or demands against decedent's estate must file their claims with this court WITHIN 3 MONTHS AFTER THE DATE OF THE FIRST PUBLICATION OF THIS NOTICE.

ALL CLAIMS NOT FILED WITHIN THE TIME PERIODS SET FORTH IN FLORIDA STATUTES 733.702 WILL BE FOREVER BARRED.

NOTWITHSTANDING THE TIME PERIODS SET FORTH ABOVE, ANY CLAIM FILED TWO (2) YEARS OR MORE AFTER THE DECEDENT'S DATE OF DEATH IS BARRED.

A Personal Representative or curator has no duty to discover whether any property held at the time of the decedent's death by the decedent or the decedent's surviving spouse is property to which the Florida Uniform Disposition of Community Property Rights at Death Act as described in ss. 732.216-732.228 applies, or may apply, unless a written demand is made by a creditor as specified under s. 732.2211. The written demand must be filed with the Clerk.

The date of first publication of this notice is October 16, 2026.

Personal Representative:
Brian Radjewski
c/o Bennett Jacobs & Adams, P.A.
PO Box 3300, Tampa, FL 33601
Attorney for Personal Representative:
Linda Muralt, Esquire
FL Bar No. 0031129
Bennett Jacobs & Adams, P.A.
PO Box 3300, Tampa, FL 33601
Phone (813) 272-1400
E-Mail: LMURALT@BJA-Law.com
October 16, 23, 2026 26-04394L

FIRST INSERTION

NOTICE TO CREDITORS
IN THE CIRCUIT COURT FOR LEE COUNTY, FLORIDA
PROBATE DIVISION
File No. 2026-CP-002897
IN RE: ESTATE OF TED STICKLER, Deceased.

The administration of the estate of TED STICKLER, deceased, whose date of death was August 21, 2026, is pending in the Circuit Court for Lee County, Florida, Probate Division, the address of which is PO Box 9346, Fort Myers, FL 33902. The names and addresses of the personal representative and the personal representative's attorney are set forth below.

All creditors of the decedent and other persons having claims or demands against decedent's estate, on whom a copy of this notice is required to be served, must file their claims with this court ON OR BEFORE THE LATER OF 3 MONTHS AFTER THE TIME OF THE FIRST PUBLICATION OF THIS NOTICE OR 30 DAYS AFTER THE DATE OF SERVICE OF A COPY OF THIS NOTICE ON THEM.

All other creditors of the decedent and other persons having claims or demands against decedent's estate must file their claims with this court WITHIN 3 MONTHS AFTER THE DATE OF THE FIRST PUBLICATION OF THIS NOTICE.

The personal representative has no duty to discover whether any property held at the time of the decedent's death by the decedent or the decedent's surviving spouse is property to which the Florida Uniform Disposition of Community Property Rights at Death Act as described in ss. 732.216-732.228, applies, or may apply, unless a written demand is made by a creditor as specified under s. 732.2211, Florida Statutes. The written demand must be filed with the clerk.

ALL CLAIMS NOT FILED WITHIN THE TIME PERIODS SET FORTH IN FLORIDA STATUTES SECTION 733.702 WILL BE FOREVER BARRED.

NOTWITHSTANDING THE TIME PERIOD SET FORTH ABOVE, ANY CLAIM FILED TWO (2) YEARS OR MORE AFTER THE DECEDENT'S DATE OF DEATH IS BARRED.

The date of first publication of this notice is: October 16, 2026.

KURT STICKLER
Personal Representative
1183 Greenery Lane
Cincinnati, OH 45233
Robert D. Hines, Esq.
Attorney for Personal Representative
Florida Bar No. 0413550
Hines Norman Hines, P.L.
1312 W. Fletcher Avenue, Suite B
Tampa, FL 33612
Telephone: 813-265-0100
Email: rhines@hnh-law.com
Secondary Email:
ntservice@hnh-law.com
October 16, 23, 2026 26-04430L

FIRST INSERTION

NOTICE TO CREDITORS
IN THE CIRCUIT COURT FOR LEE COUNTY, FLORIDA
PROBATE DIVISION
File No. 26-CP-003017
Division Probate
IN RE: ESTATE OF JAMES BURTON BIESECKER Deceased.

The administration of the estate of James Burton Biesecker, deceased, whose date of death was July 22, 2025, is pending in the Circuit Court for Lee County, Florida, Probate Division, the address of which is 1700 Monroe St, Ft. Myers, FL 33901. The names and addresses of the personal representative and the personal representative's attorney are set forth below.

All creditors of the decedent and other persons having claims or demands against decedent's estate on whom a copy of this notice is required to be served must file their claims with this court ON OR BEFORE THE LATER OF 3 MONTHS AFTER THE TIME OF THE FIRST PUBLICATION OF THIS NOTICE OR 30 DAYS AFTER THE DATE OF SERVICE OF A COPY OF THIS NOTICE ON THEM.

All other creditors of the decedent and other persons having claims or demands against decedent's estate must file their claims with this court WITHIN 3 MONTHS AFTER THE DATE OF THE FIRST PUBLICATION OF THIS NOTICE.

The personal representative has no duty to discover whether any property held at the time of the decedent's death by the decedent or the decedent's surviving spouse is property to which the Florida Uniform Disposition of Community Property Rights at Death Act as described in ss. 732.216-732.228, Florida Statutes, applies, or may apply, unless a written demand is made by a creditor as specified under s. 732.2211, Florida Statutes. The written demand must be filed with the clerk.

ALL CLAIMS NOT FILED WITHIN THE TIME PERIODS SET FORTH IN FLORIDA STATUTES SECTION 733.702 WILL BE FOREVER BARRED.

NOTWITHSTANDING THE TIME PERIODS SET FORTH ABOVE, ANY CLAIM FILED TWO (2) YEARS OR MORE AFTER THE DECEDENT'S DATE OF DEATH IS BARRED.

The date of first publication of this notice is October 16, 2026.

Personal Representative:
Cynthia L. LaFond
9432 Daylight Dr
Parrish, Florida 34219
Attorney for Personal Representative:
Eviana J. Martin, Attorney
Florida Bar Number: 36198
Martin Law Firm, PL
3701 Del Prado Blvd S.
Cape Coral, Florida 33904
Telephone: (239) 443-1094
Fax: (941) 218-1231
E-Mail:
eviana.martin@martinlawfirm.com
October 16, 23, 2026 26-04428L

FIRST INSERTION

NOTICE TO CREDITORS
IN THE CIRCUIT COURT FOR LEE COUNTY, FLORIDA
PROBATE DIVISION
File No. 26-CP-002968
IN RE: ESTATE OF ALLEN A. LEACH Deceased.

The administration of the estate of Allen A. Leach, deceased, whose date of death was July 19, 2026, is pending in the Circuit Court for Lee County, Florida, Probate Division, the address of which is P.O. Box 9346, Ft. Myers, FL 33902. The names and addresses of the Personal Representative and the Personal Representative's attorney are set forth below.

All creditors of the decedent and other persons having claims or demands against decedent's estate on whom a copy of this notice is required to be served must file their claims with this Court ON OR BEFORE THE LATER OF 3 MONTHS AFTER THE TIME OF THE FIRST PUBLICATION OF THIS NOTICE OR 30 DAYS AFTER THE DATE OF SERVICE OF A COPY OF THIS NOTICE ON THEM.

All other creditors of the decedent and other persons having claims or demands against decedent's estate must file their claims with this Court WITHIN 3 MONTHS AFTER THE DATE OF THE FIRST PUBLICATION OF THIS NOTICE.

The Personal Representative has no duty to discover whether any property held at the time of the decedent's death by the decedent or the decedent's surviving spouse is property to which the Florida Uniform Disposition of Community Property Rights at Death Act as described in ss. 732.216-732.228, Florida Statutes, applies, or may apply, unless a written demand is made by a creditor as specified under s. 732.2211, Florida Statutes. The written demand must be filed with the clerk.

ALL CLAIMS NOT FILED WITHIN THE TIME PERIODS SET FORTH IN FLORIDA STATUTES SECTION 733.702 WILL BE FOREVER BARRED.

NOTWITHSTANDING THE TIME PERIODS SET FORTH ABOVE, ANY CLAIM FILED TWO (2) YEARS OR MORE AFTER THE DECEDENT'S DATE OF DEATH IS BARRED.

The date of first publication of this notice is October 16, 2026.

Personal Representative:
Cassandra F. Leach
8 Main St., Unit 14
Jaffrey, NH 03452
Attorney for Personal Representative:
Carol R. Sellers
Florida Bar Number: 893528
3525 Bonita Beach Rd., Suite 103
Bonita Springs, FL 34134
Telephone: (239) 992-2031
Fax: (239) 992-0723
E-Mail:
csellers@richardsonsellers.com
Secondary E-Mail:
khutter@richardsonsellers.com
October 16, 23, 2026 26-04395L

FIRST INSERTION

NOTICE TO CREDITORS
IN THE CIRCUIT COURT FOR LEE COUNTY, FLORIDA
PROBATE DIVISION
File No. 26-CP-2870
Division Probate
IN RE: ESTATE OF CURTIS T. BEDEAU, Deceased.

The administration of the estate of Curtis T. Bedeau, deceased, whose date of death was August 17, 2026, is pending in the Circuit Court for Lee County, Florida, Probate Division, the address of which is Lee County Courthouse and Lee County Justice Center 1700 Monroe Street, Fort Myers, FL 33901. The names and addresses of the personal representative and the personal representative's attorney are set forth below.

All creditors of the decedent and other persons having claims or demands against decedent's estate on whom a copy of this notice is required to be served must file their claims with this court ON OR BEFORE THE LATER OF 3 MONTHS AFTER THE TIME OF THE FIRST PUBLICATION OF THIS NOTICE OR 30 DAYS AFTER THE DATE OF SERVICE OF A COPY OF THIS NOTICE ON THEM.

All other creditors of the decedent and other persons having claims or demands against decedent's estate must file their claims with this court WITHIN 3 MONTHS AFTER THE DATE OF THE FIRST PUBLICATION OF THIS NOTICE.

The personal representative has no duty to discover whether any property held at the time of the decedent's death by the decedent or the decedent's surviving spouse is property to which the Florida Uniform Disposition of Community Property Rights at Death Act as described in ss. 732.216-732.228, applies, or may apply, unless a written demand is made by a creditor as specified under s. 732.2211, Florida Statutes. The written demand must be filed with the clerk.

ALL CLAIMS NOT FILED WITHIN THE TIME PERIODS SET FORTH IN FLORIDA STATUTES SECTION 733.702 WILL BE FOREVER BARRED.

NOTWITHSTANDING THE TIME PERIOD SET FORTH ABOVE, ANY CLAIM FILED TWO (2) YEARS OR MORE AFTER THE DECEDENT'S DATE OF DEATH IS BARRED.

The date of first publication of this notice is October 16, 2026.

Personal Representative:
Tamika S. Bedeau
2838 SE 16th Pl.
Cape Coral, FL 33904
Attorney for Personal Representative:
Blake P. Hampton
E-Mail Addresses:
nosolicitations@hampton.law
frontdesk@hampton.law
Florida Bar No. 99434
Hampton Law
8931 Conference Dr Suite 2
Fort Myers, FL 33919
Telephone: (239) 309-0090
October 16, 23, 2026 26-04403L

FIRST INSERTION

NOTICE TO CREDITORS
IN THE CIRCUIT COURT FOR LEE COUNTY, FLORIDA
PROBATE DIVISION
File No. 26-CP-002967
IN RE: ESTATE OF JOYCE ELAINE COURTADE Deceased.

The administration of the estate of Joyce Elaine Courtade, deceased, whose date of death was July 15, 2026, is pending in the Circuit Court for LEE County, Florida, Probate Division, the address of which is Lee County Justice Center, Post Office Box 9346, Fort Myers, Florida 33902. The names and addresses of the personal representative and the personal representative's attorney are set forth below.

All creditors of the decedent and other persons having claims or demands against decedent's estate on whom a copy of this notice is required to be served must file their claims with this court ON OR BEFORE THE LATER OF 3 MONTHS AFTER THE TIME OF THE FIRST PUBLICATION OF THIS NOTICE OR 30 DAYS AFTER THE DATE OF SERVICE OF A COPY OF THIS NOTICE ON THEM.

All other creditors of the decedent and other persons having claims or demands against decedent's estate must file their claims with this court WITHIN 3 MONTHS AFTER THE DA TE OF THE FIRST PUBLICATION OF THIS NOTICE.

The personal representative has no duty to discover whether any property held at the time of the decedent's death by the decedent or the decedent's surviving spouse is property to which the Florida Uniform Disposition of Community Property Rights at Death Act as described in ss. 732.216-732.228, Florida Statutes, applies, or may apply, unless a written demand is made by a creditor as specified under s. 732.2211, Florida Statutes. The written demand must be filed with the clerk.

ALL CLAIMS NOT FILED WITHIN THE TIME PERIODS SET FORTH IN FLORIDA STATUTES SECTION 733.702 WILL BE FOREVER BARRED.

NOTWITHSTANDING THE TIME PERIODS SET FORTH ABOVE, ANY CLAIM FILED TWO (2) YEARS OR MORE AFTER THE DECEDENT'S DATE OF DEATH IS BARRED.

The date of first publication of this notice is October 16, 2026.

Personal Representative:
Michele Padilla
2718 46 St. SW, Lehigh Acres, Fl 33976
Lehigh Acres, Florida 33936
Attorney for Personal Representative:
Kenneth K. Thompson, Attorney
Florida Bar Number: 0344044
1150 Lee Boulevard, Suite 1A
Lehigh Acres, Florida 33936
Telephone: (239) 369-5664
Fax: (239) 369-8763
E-Mail:
ken@kenthompson-lawoffice.com
Secondary E-Mail:
yvette@kenthompson-lawoffice.com
October 16, 23, 2026 26-04455L

FIRST INSERTION

AMENDED NOTICE TO CREDITORS
IN THE CIRCUIT COURT OF THE TWENTIETH JUDICIAL CIRCUIT, IN AND FOR LEE COUNTY, FLORIDA
PROBATE DIVISION
FILE NO. 36-2025-CP-003328
IN RE: ESTATE OF THOMAS F. WINTERS a/k/a THOMAS FRANCIS WINTERS, JR., Deceased.

The administration of the estate of THOMAS F. WINTERS a/k/a THOMAS FRANCIS WINTERS, JR., deceased, whose date of death was August 25, 2025, is pending in the Circuit Court for Lee County, Florida, Probate Division, the address of which is Clerk of the Circuit Court, Probate, P.O. Box 9346, Fort Myers, FL 33902. The names and addresses of the personal representative and the personal representative's attorney are set forth below.

All creditors of the decedent and other persons having claims or demands against the decedent's estate on whom a copy of this notice is required to be served must file their claims with this court ON OR BEFORE THE LATER OF 3 MONTHS AFTER THE TIME OF THE FIRST PUBLICATION OF THIS NOTICE OR 30 DAYS AFTER THE DATE OF SERVICE OF A COPY OF THIS NOTICE ON THEM.

All other creditors of the decedent and other persons having claims or demands against the decedent's estate must file their claims with this court WITHIN 3 MONTHS AFTER THE DATE OF THE FIRST PUBLICATION OF THIS NOTICE.

The Personal Representative or curator has no duty to discover whether any property held at the time of the Decedent's death by the Decedent or the Decedent's surviving spouse is property to which the Florida Uniform Disposition of Community Property Rights at Death Act as described in Florida Statutes Sections 732.216 – 732.228 applies, or may apply, unless a written demand is made by a creditor as specified under Florida Statutes Section 732.2211.

ALL CLAIMS NOT SO FILED WITHIN THE TIME PERIODS SET FORTH IN FLORIDA STATUTES SECTION 733.702 WILL BE FOREVER BARRED.

NOTWITHSTANDING THE TIME PERIODS SET FORTH ABOVE, ANY CLAIM FILED TWO (2) YEARS OR MORE AFTER THE DECEDENT'S DATE OF DEATH IS BARRED.

The date of first publication of this Notice is October 16, 2026.

KIM ANNE WOULAS
Personal Representative of the Estate of THOMAS F. WINTERS a/k/a THOMAS FRANCIS WINTERS, JR.
8435 Antelope Avenue
Palm Bay, Florida 32909
BETTEN MURPHY & WEISS, Attorneys, P.A.
Attorneys for Personal Representative
Mildred Prieto, Esq.
Florida Bar No. 0169927
2627 W. Eau Gallie Boulevard, Suite 105
Melbourne, Florida 32935
(321) 676-2525
mildred@brevardelderlaw.com
October 16, 23, 2026 26-04404L

FIRST INSERTION

NOTICE TO CREDITORS
IN THE CIRCUIT COURT OF THE TWENTIETH JUDICIAL CIRCUIT IN AND FOR LEE COUNTY, FLORIDA
PROBATE DIVISION
File No. 2026-CP- 002401
IN RE: ESTATE OF SHARON LEE PERKINS, Deceased

The administration of the estate of SHARON LEE PERKINS, deceased, whose date of death was May 23, 2026, is pending in the Circuit Court for Lee County, Florida, Probate Division, the address of which is East Entrance, Justice Center Proper, 1700 Monroe Street, Fort Myers FL 33901. The names and addresses of the personal representative and the personal representative's attorney are set forth below.

All creditors of the decedent and other persons having claims or demands against decedent's estate on whom a copy of this notice is required to be served must file their claims with this court ON OR BEFORE THE LATER OF 3 MONTHS AFTER THE TIME OF THE FIRST PUBLICATION OF THIS NOTICE OR 30 DAYS AFTER THE DATE OF SERVICE OF A COPY OF THIS NOTICE ON THEM.

All other creditors of the decedent and other persons having claims or demands against decedent's estate must file their claims with this court WITHIN 3 MONTHS AFTER THE DATE OF THE FIRST PUBLICATION OF THIS NOTICE.

The personal representative has no duty to discover whether any property held at the time of the decedent's death by the decedent or the decedent's surviving spouse is property to which the Florida Uniform Disposition of Community Property Rights at Death Act as described in ss. 732.216-732.228, Florida Statutes, applies, or may apply, unless a written demand is made by a creditor as specified under s. 732.2211, Florida Statutes. The written demand must be filed with the clerk.

ALL CLAIMS NOT FILED WITHIN THE TIME PERIODS SET FORTH IN FLORIDA STATUTES SECTION 733.702 WILL BE FOREVER BARRED.

NOTWITHSTANDING THE TIME PERIODS SET FORTH ABOVE, ANY CLAIM FILED TWO (2) YEARS OR MORE AFTER THE DECEDENT'S DATE OF DEATH IS BARRED.

The date of first publication of this notice is October 16, 2026.

Personal Representative:
Darcy Gail Perkins
c/o Hagen Law Firm
5290 Summerlin Commons Way
Suite 1003
Fort Myers, Florida 33907
Attorney for Personal Representative:
Lisa Curia George
Florida Bar Number: 1033829
Hagen Law Firm
5290 Summerlin Commons Way, Suite 1003
Fort Myers, FL 33907
Telephone: (239) 275-0808
Fax: (239) 275-3313
E-Mail: lisa@mikehagen.com
Secondary E-Mail:
pat@mikehagen.com
October 16, 23, 2026 26-04429L

FIRST INSERTION

NOTICE TO CREDITORS
IN THE CIRCUIT COURT FOR LEE COUNTY, FLORIDA
PROBATE DIVISION
Probate Division
File No. 26-CP-1564
Division Probate
IN RE: ESTATE OF KATHLEEN ANN SHERRILL Deceased.

The administration of the estate of KATHLEEN ANN SHERRILL, deceased, whose date of death was September 24, 2024, is pending in the Circuit Court for Lee County, Florida, Probate Division, the address of which is 1700 Monroe St, Fort Myers, FL 33901. The names and addresses of the personal representative and the personal representative's attorney are set forth below.

All creditors of the decedent and other persons having claims or demands against decedent's estate on whom a copy of this notice is required to be served must file their claims with this court ON OR BEFORE THE LATER OF 3 MONTHS AFTER THE TIME OF THE FIRST PUBLICATION OF THIS NOTICE OR 30 DAYS AFTER THE DATE OF SERVICE OF A COPY OF THIS NOTICE ON THEM.

All other creditors of the decedent and other persons having claims or demands against decedent's estate must file their claims with this court WITHIN 3 MONTHS AFTER THE DATE OF THE FIRST PUBLICATION OF THIS NOTICE.

The personal representative has no duty to discover whether any property held at the time of the decedent's death by the decedent or the decedent's surviving spouse is property to which the Florida Uniform Disposition of Community Property Rights at Death Act as described in ss. 732.216-732.228, Florida Statutes, applies, or may apply, unless a written demand is made by a creditor as specified under s. 732.2211, Florida Statutes. The written demand must be filed with the clerk.

ALL CLAIMS NOT FILED WITHIN THE TIME PERIODS SET FORTH IN FLORIDA STATUTES SECTION 733.702 WILL BE FOREVER BARRED.

NOTWITHSTANDING THE TIME PERIODS SET FORTH ABOVE, ANY CLAIM FILED TWO (2) YEARS OR MORE AFTER THE DECEDENT'S DATE OF DEATH IS BARRED.

The date of first publication of this notice is October 16, 2026.

Personal Representative:
DocuSigned by: Tim Sherrill
TIMOTHY S. SHERRILL
3418 Alamo Pl S, Unit A
Seattle, Washington 98144
Attorney for Personal Representative:
Signed by: Alan Celej
ALAN M. CELEJ
Attorney
Florida Bar Number: 1024890
12730 McGregor Boulevard
Fort Myers, FL 33919
Telephone: (239) 266-2619
Fax: (239) 309-0557
E-Mail: acelej@celejlaw.com
Secondary E-Mail: eve@celejlaw.com
October 16, 23, 2026 26-04567L

Q&A

What is a public notice?

A public notice is information intended to inform citizens of government activities. The notice should be published in a forum independent of the government, readily available to the public, capable of being securely archived and verified by authenticity.

The West Orange Times carries public notices in Orange County, Florida.

LV18237_V34

--- ESTATE ---

FIRST INSERTION

NOTICE TO CREDITORS
IN THE CIRCUIT OF THE TWENTIETH JUDICIAL CIRCUIT IN AND FOR LEE COUNTY, FLORIDA
PROBATE DIVISION
File No. 26-CP-002914
IN RE: THE ESTATE OF: GARY LEIGHTON CRON
Deceased.

The administration of the estate of GARY LEIGHTON CRON, deceased, whose date of death was June 26, 2026, is pending in the Circuit Court of Lee County, Florida Probate Division, the address of which is P.O. Box 9346, Fort Myers, FL 33902. The names and addresses of the personal representative and the personal representative's attorney are set forth below.

All creditors of the decedent and other persons having claims or demands against the decedent's estate on whom a copy of this notice is required to be served, must file their claims with this Court WITHIN THE LATER OF THREE MONTHS AFTER THE TIME OF THE FIRST PUBLICATION OF THIS NOTICE OR 30 DAYS AFTER THE DATE OF SERVICE OF A COPY OF THIS NOTICE ON THEM.

All other creditors of this decedent and other persons having claims or demands against the decedent's estate must file their claims with the court WITHIN THREE MONTHS AFTER THE DATE OF THE FIRST PUBLICATION OF THIS NOTICE.

ALL CLAIMS NOT FILED WITHIN THE TIME PERIODS SET FORTH IN THE FLORIDA STATUTES WILL BE FOREVER BARRED.

NOT WITHSTANDING THE TIME PERIODS SET FORTH ABOVE ANY CLAIM FILED TWO (2) YEARS OR MORE AFTER THE DECEDENT'S DATE OF DEATH IS BARRED.

The date of first publication of this notice is October 16, 2026.

Personal Representative:
Dean W. Cron
4245 Persimmon Rd
Lancaster, SC 29720
Attorney for Personal Representative:
WESLEY T. MATHIEU, ESQ.
sklawyers, pllc
1314 Cape Coral Pkwy E. Ste. 320
Cape Coral, FL 33904
Telephone: (239) 772-1993
Email: wmathieu@sklawyers.net
Florida Bar No. 116222
October 16, 23, 2026 26-04490L

FIRST INSERTION

NOTICE TO CREDITORS
IN THE CIRCUIT COURT FOR THE TWENTIETH JUDICIAL CIRCUIT IN AND FOR LEE COUNTY, FLORIDA
Probate Division
File No. 26-CP-002728
IN RE: ESTATE OF BRENDA TERRY CLABBERS, deceased.

The administration of the testate estate of Brenda Terry Clabbers, deceased, who died on May 19, 2026, File Number 26-CP-002728 is pending in the Circuit Court for Lee County, Florida, Probate Division, the address of which is Lee County Justice Center, 1700 Monroe Street, 1st Floor, PO Box 9346, Fort Myers, FL 33902. The name and address of the personal representative and the personal representative's attorney are set forth below.

ALL INTERESTED PERSONS ARE NOTIFIED THAT:

All creditors of the decedent and other persons having claims or demands against decedent's estate on whom a copy of this Notice is served must file their claims with this Court WITHIN THE LATER OF THREE MONTHS AFTER THE DATE OF THE FIRST PUBLICATION OF THIS NOTICE OR THIRTY DAYS AFTER THE DATE OF SERVICE OF A COPY OF THIS NOTICE ON THEM.

All other creditors of the decedent and persons having claims or demands against the decedent's estate must file their claims with this Court WITHIN THREE MONTHS AFTER THE DATE OF THE FIRST PUBLICATION OF THIS NOTICE.

ALL CLAIMS NOT SO FILED WILL BE FOREVER BARRED.

NOTWITHSTANDING THE TIME PERIODS SET FORTH ABOVE, ANY CLAIM FILED TWO YEARS OR MORE AFTER THE DECEDENT'S DATE OF DEATH IS BARRED.

The date of the first publication of this Notice to Creditors is October 16, 2026.

Michelle D. Atkinson,
Personal Representative
3378 Hampshire Rd.
Furlong, PA 18925
Brian J. Downey, Esq.
FL Bar Number: 0017975
BARRETT MCNAGNY LLP
Attorney for Personal Representative
215 E. Berry St.
Fort Wayne, IN 46802
Email: bjd@barrettlaw.com
Phone: (260) 423-8871
Fax: (260) 423-8920
October 16, 23, 2026 26-04457L

FIRST INSERTION

NOTICE TO CREDITORS
IN THE CIRCUIT COURT FOR LEE COUNTY, FLORIDA
PROBATE DIVISION
File No. 26-CP-002098
IN RE: ESTATE OF KATHERINE MISIK,
Deceased.

The administration of the estate of KATHERINE MISIK, deceased, whose date of death was May 7, 2026, is pending in the Circuit Court for Lee County, Florida, Probate Division, the address of which is PO Box 9346, Fort Myers, FL 33902. The names and addresses of the curator and the curator's attorney are set forth below.

All creditors of the decedent and other persons having claims or demands against decedent's estate, on whom a copy of this notice is required to be served, must file their claims with this court ON OR BEFORE THE LATER OF 3 MONTHS AFTER THE TIME OF THE FIRST PUBLICATION OF THIS NOTICE OR 30 DAYS AFTER THE DATE OF SERVICE OF A COPY OF THIS NOTICE ON THEM.

All other creditors of the decedent and other persons having claims or demands against decedent's estate must file their claims with this court WITHIN 3 MONTHS AFTER THE DATE OF THE FIRST PUBLICATION OF THIS NOTICE.

A Personal Representative or curator has no duty to discover whether any property held at the time of the decedent's death by the decedent or the decedent's surviving spouse is property to which the Florida Uniform Disposition of Community Property Rights at Death Act as described in ss. 732.216-732.228, applies, or may apply, unless a written demand is made by a creditor as specified under s. 732.2211.

ALL CLAIMS NOT FILED WITHIN THE TIME PERIODS SET FORTH IN FLORIDA STATUTES SECTION 733.702 WILL BE FOREVER BARRED.

NOTWITHSTANDING THE TIME PERIOD SET FORTH ABOVE, ANY CLAIM FILED TWO (2) YEARS OR MORE AFTER THE DECEDENT'S DATE OF DEATH IS BARRED.

The date of first publication of this notice is: October 16, 2026.

Robert D. Hines
Curator
1312 W. Fletcher Avenue, Suite B
Tampa, FL 33612
Robert D. Hines, Esq.
Attorney for Curator
Florida Bar No. 0413550
Hines Norman Hines, P.L.
1312 W. Fletcher Avenue, Suite B
Tampa, FL 33612
Telephone: 813-265-0100
Email: rhines@hnh-law.com
Secondary Email:
jrivera@hnh-law.com
October 16, 23, 2026 26-04472L

FIRST INSERTION

NOTICE OF FORECLOSURE SALE
IN THE CIRCUIT COURT OF THE 20TH JUDICIAL CIRCUIT, IN AND FOR LEE COUNTY, FLORIDA
GENERAL JURISDICTION DIVISION
CASE NO.: 25-CA-006653
PENNYMAC LOAN SERVICES, LLC,
Plaintiff, vs.
LINDSEY ELLEN WOOTTON A/K/A LINDSEY WOOTTON; UNKNOWN SPOUSE OF LINDSEY ELLEN WOOTTON A/K/A LINDSEY WOOTTON; US DEPARTMENT OF HOUSING AND URBAN DEVELOPMENT; PORTFOLIO RECOVERY ASSOCIATES, LLC; UNKNOWN TENANT #1; UNKNOWN TENANT #2,
Defendant(s).

NOTICE IS HEREBY GIVEN pursuant to Final Judgment of Mortgage Foreclosure dated July 16, 2026 entered in Civil Case No. 25-CA-006653 of the Circuit Court of the 20TH Judicial Circuit in and for Lee County, Florida, wherein PENNYMAC LOAN SERVICES, LLC is Plaintiff and LINDSEY ELLEN WOOTTON a/k/a LINDSEY WOOTTON, et al, are Defendants. The Clerk, KEVIN C. KARNES, shall sell to the highest and best bidder for cash at LEE County's On-Line Public Auction website: https://www.lee.realforeclose.com, at 9:00 A.M. on December 10, 2026, in accordance with Chapter 45, Florida Statutes, the following described property located in LEE County, Florida, as set forth in said Final Judgment of Mortgage Foreclosure to-wit:

LOTS 7 AND 8. BLOCK 4556, CAPE CORAL UNIT 68. ACCORDING TO PLAT THEREOF AS RECORDED IN PLAT BOOK 23, PAGE 100, OF THE PUBLIC RECORDS OF LEE COUNTY, FLORIDA.

Any person claiming an interest in the surplus from the sale, if any, other than the property owner as of the date of the Lis Pendens must file a claim before the clerk reports the surplus as unclaimed. The court, in its discretion, may enlarge the time of the sale. Notice of the changed time of sale shall be published as provided herein.

Dated this 10/07/2026

KEVIN C. KARNES
Clerk of the Circuit Court
(SEAL) By: T Mann
Deputy Clerk

This document was prepared by:
FRENKEL LAMBERT WEISMAN & GORDON, LLP
Attorney for Plaintiff
Central Mailing address
53 Gibson St
Bay Shore, NY 11706
Telephone: (631) 969-3100 |
Fax (631) 982-4513
04-102734-F00
October 16, 23, 2026 26-04391L

FIRST INSERTION

NOTICE TO CREDITORS
IN THE CIRCUIT COURT FOR LEE COUNTY, FLORIDA
PROBATE DIVISION
File No. 26-CP-002983
Division Probate
IN RE: ESTATE OF SUSAN ALEXANDER MICHOD a/k/a SUSAN A. MICHOD
Deceased.

The administration of the Estate of Susan Alexander Michod a/k/a Susan A. Michod, deceased, whose date of death was August 8, 2026, is pending in the Circuit Court for Lee County, Florida, Probate Division, the address of which is 2075 Dr. Martin Luther King Jr. Boulevard, Fort Myers, FL 33901. The names and addresses of the personal representative and the personal representative's attorney are set forth below.

All creditors of the decedent and other persons having claims or demands against decedent's estate on whom a copy of this notice is required to be served must file their claims with this Court ON OR BEFORE THE LATER OF 3 MONTHS AFTER THE TIME OF THE FIRST PUBLICATION OF THIS NOTICE OR 30 DAYS AFTER THE DATE OF SERVICE OF A COPY OF THIS NOTICE ON THEM. All other creditors of the decedent and other persons having claims or demands against decedent's estate must file their claims with this court WITHIN 3 MONTHS AFTER THE DATE OF THE FIRST PUBLICATION OF THIS NOTICE. The personal representative has no duty to discover whether any property held at the time of the decedent's death by the decedent or the decedent's surviving spouse is property to which the Florida Uniform Disposition of Community Property Rights at Death Act as described in §732.216-732.228, applies, or may apply, unless a written demand is made by a creditor as specified under §732.2211, Florida Statutes. The written demand must be filed with the clerk. ALL CLAIMS NOT FILED WITHIN THE TIME PERIODS SET FORTH IN FLORIDA STATUTES §733.702 WILL BE FOREVER BARRED. NOTWITHSTANDING THE TIME PERIODS SET FORTH ABOVE, ANY CLAIM FILED TWO (2) YEARS OR MORE AFTER THE DECEDENT'S DATE OF DEATH IS BARRED.

The date of first publication of this notice is October 16, 2026.

Personal Representative
Charles L. Michod, Jr.
385 Barbarosa
Boca Grande, FL 33921
Attorney for Personal Representative
Tina M. Mays, Esq.
Florida Bar No. 0726044
Mizell & Mays Law Firm, P.A.
331 Sullivan St.,
Punta Gorda, FL 33950
Telephone: (941) 575-9291
E-mail Addresses:
tmays@mizell-law.com,
ndotres@mizell-law.com
October 16, 23, 2026 26-04473L

FIRST INSERTION

NOTICE OF SALE PURSUANT TO CHAPTER 45
IN THE CIRCUIT COURT OF THE 20TH JUDICIAL CIRCUIT, IN AND FOR LEE COUNTY, FLORIDA
CASE NO.: 23-CA-007301
LOANDEPOT.COM, LLC,
Plaintiff, v.
NORMA IRIS RODRIGUEZ, et al,
Defendant(s).

NOTICE IS HEREBY GIVEN that pursuant to a Final Judgment in Foreclosure entered on October 5, 2026 and entered in Case No. 23-CA-007301 in the Circuit Court of the 20th Judicial Circuit in and for Lee County, Florida, wherein NORMA IRIS RODRIGUEZ, et al., are the Defendants. The Clerk of the Court, KEVIN KARNES, will sell to the highest bidder for cash at www.lee.realforeclose.com on November 5, 2026 at 9:00am, the following described real property as set forth in said Final Judgment, to wit:

LOT 23, BLOCK 112, UNIT 11, SECTION 13, TOWNSHIP 44 SOUTH, RANGE 26 EAST, LEHIGH ACRES, ACCORDING TO THE PLAT THEREOF, AS RECORDED IN PLAT BOOK 15, PAGE 62, OF THE PUBLIC RECORDS OF LEE COUNTY, FLORIDA.

and commonly known as: 3529 N SUNSHINE BLVD, LEHIGH ACRES, FL 33971 (the "Property").

ANY PERSON CLAIMING AN INTEREST IN THE SURPLUS FROM THE SALE, IF ANY, OTHER THAN THE PROPERTY OWNER AS OF THE DATE OF THE LIS PENDENS MUST FILE A CLAIM WITHIN 60 DAYS AFTER THE SALE.

WITNESS my hand and the seal of the court on 10/13/2026.

Kevin C. Karnes
As Clerk of the Circuit Court
Lee County, Florida
(SEAL) N Wright-Angad
DEPUTY CLERK

GHIDOTTI | BERGER LLP
Attorneys for Plaintiff
10800 Biscayne Blvd., Suite 201
Miami, FL 33161
Telephone: (305) 501-2808
Facsimile: (954) 780-5578
By: /s/ Rebecca E. Smith
Jason Duggar, Esq.
FL Bar No.: 83813
Christophal Hellewell, Esq.
FL Bar No.: 114230
Anya E. Macias, Esq.
FL Bar No.: 0458600
Tara Rosenfeld, Esq.
FL Bar No.: 59454
Johanni Fernandez-Marmol, Esq.
FL Bar No.: 1055042
Jimmy Edwards, Esq.
FL Bar No.: 81855
Rebecca E. Smith, Esq.
FL Bar No.: 1069865
Spencer Gollahon, Esq.
FL Bar No.: 647799
Paris Roach, Esq.
FL Bar No.: 1028751
fcpleadings@ghidottiberger.com
October 16, 23, 2026 26-04462L

FIRST INSERTION

NOTICE TO ADMINISTRATION
(testate)
IN THE CIRCUIT COURT FOR LEE COUNTY, FLORIDA
PROBATE DIVISION
File No. 26-CP-002967
IN RE: ESTATE OF JOYCE ELAINE COURTADE
Deceased.

The administration of the estate of Joyce Elaine Courtade, deceased, is pending in the Circuit Court for LEE County, Florida, Probate Division, the address of which is 1500 Monroe street, Fort Myers, Fl . The file number for the estate is 26-CP-002967. The estate is testate and the dates of the decedent's will and any codicils are August 26, 2017.

The names and addresses of the personal representative and the personal representative's attorney are set forth below. The fiduciary lawyer-client privilege in Section 90.5021, Florida Statutes, applies with respect to the personal representative and any attorney employed by the personal representative.

Any interested person on whom a copy of the notice of administration is served must file with the court, on or before the date that is 3 months after the date of service of a copy of the Notice of Administration on that person, any objection that challenges the validity of the will, venue, or jurisdiction of the court. The 3 month time period may only be extended for estoppel based upon a misstatement by the personal representative regarding the time period within which an objection must be filed. The time period may not be extended for any other reason, including affirmative representation, failure to disclose information, or misconduct by the personal representative or any other person. Unless sooner barred by section 733.212(3), Florida Statutes, all objections to the validity of the will, venue or the jurisdiction of the court must be filed no later than the earlier of the entry of an order of final discharge of the personal representative or 1 year after service of the notice of administration.

Persons who may be entitled to exempt property under section 732.402, Florida Statutes, will be deemed to have waived their rights to claim that property as exempt property unless a petition for determination of exempt property is filed by such persons or on their behalf on or before the later of the date that is 4 months after the date of service of a copy of the notice of administration on such persons or the date that is 40 days after the date of termination of any proceedings involving the construction, admission to probate, or validity of the will or involving any other matter affecting any part of the exempt property.

The personal representative has no duty to discover whether any property held at the time of the decedent's death by the decedent or the decedent's surviving spouse is property to which the Florida Uniform Disposition of Community Property Rights at Death Act as described in ss. 732.216-732.228, Florida Statutes, applies, or may apply, unless a written demand is made by the surviving spouse or a beneficiary as specified under s. 732.2211, Florida Statutes. The written demand must be filed with the clerk.

Unless an extension is granted pursuant to section 732.2135(2), Florida Statutes, an election to take an elective share must be filed on or before the earlier of the date that is 6 months after the date of service of a copy of the notice of administration on the surviving spouse, an attorney in fact or a guardian of the property of the surviving spouse; or the date that is 2 years after the date of the decedent's death.

Under certain circumstances and by failing to contest the will, the recipient of the notice of administration may be waiving his or her right to contest the validity of a trust or other writing incorporated by reference into a will.

Personal Representative:
Michele Padilla
207 Irving Ave.
Lehigh Acres, Florida 33936
Attorney for Personal Representative:
Kenneth K. Thompson, Attorney
Florida Bar Number: 0344044
1150 Lee Boulevard, Suite 1A
Lehigh Acres, Florida 33936
Telephone: (239) 369-5664
Fax: (239) 369-8763
E-Mail:
ken@kenthompson-lawoffice.com
Secondary E-Mail:
yvette@kenthompson-lawoffice.com
October 16, 23, 2026 26-04456L

FIRST INSERTION

NOTICE TO CREDITORS
IN THE CIRCUIT COURT FOR LEE COUNTY, FLORIDA
PROBATE DIVISION
File No. 26-CP-002942
IN RE: ESTATE OF JAMES C. KOSESKI, A/K/A JAMES CHESTER KOSESKI,
Deceased.

The administration of the estate of JAMES C. KOSESKI, A/K/A JAMES CHESTER KOSESKI, deceased, whose date of death was July 18, 2026, is pending in the Circuit Court for Lee County, Florida, Probate Division, the address of which is 2075 Dr. Martin Luther King, Jr, Boulevard, Fort Myers, Florida 33901. The names and addresses of the personal representative and the personal representative's attorney are set forth below.

All creditors of the decedent and other persons having claims or demands against decedent's estate on whom a copy of this notice is required to be served must file their claims with this court ON OR BEFORE THE LATER OF 3 MONTHS AFTER THE TIME OF THE FIRST PUBLICATION OF THIS NOTICE OR 30 DAYS AFTER THE DATE OF SERVICE OF A COPY OF THIS NOTICE ON THEM.

All other creditors of the decedent and other persons having claims or demands against decedent's estate must file their claims with this court WITHIN 3 MONTHS AFTER THE DATE OF THE FIRST PUBLICATION OF THIS NOTICE.

The personal representative has no duty to discover whether any property held at the time of the decedent's death by the decedent or the decedent's surviving spouse is property to which the Florida Uniform Disposition of Community Property Rights at Death Act as described in ss. 732.216-732.228, Florida Statutes, applies, or may apply, unless a written demand is made by a creditor as specified under s. 732.2211, Florida Statutes. The written demand must be filed with the clerk.

ALL CLAIMS NOT FILED WITHIN THE TIME PERIODS SET FORTH IN FLORIDA STATUTES SECTION 733.702 WILL BE FOREVER BARRED.

NOTWITHSTANDING THE TIME PERIODS SET FORTH ABOVE, ANY CLAIM FILED TWO (2) YEARS OR MORE AFTER THE DECEDENT'S DATE OF DEATH IS BARRED.

The date of first publication of this notice is October 16, 2026.

Personal Representative
KEVIN T. ROBINSON
20793 Wheelock Drive
North Fort Myers, Florida 33917
Attorney for Personal Representative:
KYLE T. MORDEW, Esq.
Florida Bar Number: 1022234
Hahn Loeser & Parks LLP
5811 Pelican Bay Blvd, Suite 650
Naples, Florida 34108
Telephone: (239) 552-2978
Fax: (239) 451-4027
E-Mail: kmordew@hahnlaw.com
Secondary E-Mail:
mgonzalez@hahnlaw.com
Secondary E-Mail:
dlegan@hahnlaw.com
21740950.1
October 16, 23, 2026 26-04452L

FIRST INSERTION

NOTICE TO CREDITORS
IN THE CIRCUIT COURT FOR LEE COUNTY, FLORIDA
PROBATE DIVISION
File No.: 26-CP-000935
Division: P(7)
IN RE: ESTATE OF MARY ANN MARKELL,
Deceased.

The administration of the estate of Mary Ann Markell, deceased, whose date of death was May 14, 2025, is pending in the Circuit Court for Lee County, Florida, Probate Division, the address of which is P.O. Box 9346, Fort Myers, FL 33902. The names and addresses of the personal representative and the personal representative's attorney are set forth below.

All creditors of the decedent and other persons having claims or demands against decedent's estate on whom a copy of this notice is required to be served must file their claims with this court ON OR BEFORE THE LATER OF 3 MONTHS AFTER THE TIME OF THE FIRST PUBLICATION OF THIS NOTICE OR 30 DAYS AFTER THE DATE OF SERVICE OF A COPY OF THIS NOTICE ON THEM.

All other creditors of the decedent and other persons having claims or demands against decedent's estate must file their claims with this court WITHIN 3 MONTHS AFTER THE DATE OF THE FIRST PUBLICATION OF THIS NOTICE.

The personal representative has no duty to discover whether any property held at the time of the decedent's death by the decedent or the decedent's surviving spouse is property to which the Florida Uniform Disposition of Community Property Rights at Death Act as described in ss. 732.216-732.228, Florida Statutes, applies, or may apply, unless a written demand is made by a creditor as specified under s. 732.2211, Florida Statutes. The written demand must be filed with the clerk.

ALL CLAIMS NOT FILED WITHIN THE TIME PERIODS SET FORTH IN FLORIDA STATUTES SECTION 733.702 WILL BE FOREVER BARRED.

NOTWITHSTANDING THE TIME PERIODS SET FORTH ABOVE, ANY CLAIM FILED TWO (2) YEARS OR MORE AFTER THE DECEDENT'S DATE OF DEATH IS BARRED.

The date of first publication of this notice is October 16, 2026.

Personal Representative:
Joseph Markell
15719 Chapel Lake Drive
Cypress, Texas 77429
Attorney for Personal Representative:
RODOLFO SUAREZ, JR. ESQ.
Fla. Bar No. 013201
PILAR V. VAZQUEZ, ESQ.
Fla. Bar No. 115839
Suarez Law
Attorneys for Petitioner
9100 S. Dadeland Blvd., Ste. 1620
Miami, Florida 33156
Tel. (305) 448-4244 /
Fax (305) 448-4211
Primary Email:
rudy@suarezlawyers.com
Secondary Email:
eservice@suarezlawyers.com
October 16, 23, 2026 26-04474L

SUBSCRIBE TO THE BUSINESS OBSERVER
Call: (941) 362-4848 or go to: www.businessobserverfl.com
Business Observer
LV4269

--- ACTIONS / SALES ---

FIRST INSERTION

NOTICE OF FORECLOSURE SALE
IN THE CIRCUIT COURT OF THE TWENTIETH JUDICIAL CIRCUIT, IN AND FOR LEE COUNTY, FLORIDA
CIVIL DIVISION
CASE NO:25-CA-005781
LAKEVIEW LOAN SERVICING, LLC,
Plaintiff, vs.
HELEN BLYTHE LIMEHOUSE; ARTHUR JACKSON LIMEHOUSE; UNITED STATES OF AMERICA ON BEHALF OF THE SECRETARY OF HOUSING AND URBAN DEVELOPMENT; UNKNOWN TENANT IN POSSESSION OF THE SUBJECT PROPERTY; OCCUPANT OF THE PROPERTY;ANY AND ALL UNKNOWN PARTIES CLAIMING BY, THROUGH, UNDER AND AGAINST THE NAMED INDIVIDUAL DEFENDANT(S) WHO ARE NOT KNOWN TO BE DEAD OR ALIVE, WHETHER UNKNOWN PARTIES MAY CLAIM AN INTEREST AS SPOUSES, HEIRS, DEVISEES, GRANTEES, OR OTHER CLAIMANTS.
Defendant(s).

NOTICE IS HEREBY GIVEN pursuant to Final Judgment of Foreclosure dated the 30th day of September, 2026, and entered in Case No. 25-CA-005781 , of the Circuit Court of the Twentieth Judicial Circuit in and for Lee County, Florida, wherein Lakeview Loan Servicing, LLC is the Plaintiff and HELEN BLYTHE LIMEHOUSE; ARTHUR JACKSON LIMEHOUSE; UNITED STATES OF AMERICA ON BEHALF OF THE SECRETARY OF HOUSING AND URBAN DEVELOPMENT; and UNKNOWN TENANTS IN POSSESSION OF THE SUBJECT PROPERTY are defendants. Kevin C. Karnes as the Clerk of the Circuit Court shall sell to the highest and best bidder for cash at www.lee.realforeclose.com at 9:00 AM on the 19th day of November, 2026, the following described property as set forth in said Final Judgment, to wit:

LOT 8, BLOCK G, OF LOVEJOY PARK, ACCORDING TO THE PLAT THEREOF, AS RECORDED IN PLAT BOOK 5, PAGE 26, OF THE PUBLIC RECORDS OF LEE COUNTY, FLORIDA.

IF YOU ARE A PERSON CLAIMING A RIGHT TO FUNDS REMAINING AFTER THE SALE, YOU MUST FILE A CLAIM WITH THE CLERK NO LATER THAN THE DATE THAT THE CLERK REPORTS THE FUNDS AS UNCLAIMED. IF YOU FAIL TO FILE A CLAIM, YOU WILL NOT BE ENTITLED TO ANY REMAINING FUNDS. AFTER THE FUNDS ARE REPORTED AS UNCLAIMED, ONLY THE OWNER OF RECORD AS OF THE DATE OF THE LIS PENDENS MAY CLAIM THE SURPLUS.

Dated this day of 10/08/2026.

Kevin C. Karnes
Clerk of the Circuit Court
(SEAL) By: N Wright-Angad
Deputy Clerk

Submitted by:
Tromberg, Miller, Morris & Partners, PLLC
ATTORNEY FOR PLAINTIFF
600 West Hillsboro Boulevard
Suite 600
Deerfield Beach, FL 33441
DESIGNATED PRIMARY E-MAIL FOR SERVICE PURSUANT TO FLA. R. JUD. ADMIN 2.516
ESERVICE@TMPPLLC.COM
25FL801-0128
October 16, 23, 2026 26-04416L

FIRST INSERTION

AMENDED NOTICE OF SALE PURSUANT TO CHAPTER 45[1]
(2141 NW 21st Place, Cape Coral, Florida 33993)
IN THE COUNTY COURT OF THE TWENTIETH JUDICIAL CIRCUIT IN AND FOR LEE COUNTY, FLORIDA
CIVIL DIVISION
Case No. 25-CA-6215
TRYON STREET ACQUISITION TRUST I,
Plaintiff, v.
STOJA LLC, LUIS FELIPE STONE ESCANILLA, CRISTIAN ANDRES VETH RAFFO aka Christian Andres Veth Raffo, SIX SIGMA ROOFING CONTRACTORS, LLC, and JOHN / JANE DOE, fictitious names representing tenants in possession,
Defendants.

Notice is given that pursuant to the Final Judgment of Foreclosure October 2, 2026, entered in Case No. 25-CA-6215 of the Circuit Court of the Twentieth Judicial Circuit in and for Lee County, Florida, in which TRYON STREET ACQUISITION TRUST I, is the Plaintiff, and STOJA LLC, et. al., are the Defendants, the Clerk of the Circuit Court will sell to the highest and best bidder for cash to be conducted in an online sale at http://www.lee.realforeclose.com beginning at 9:00 a.m. on November 19, 2026, in accordance with Chapter 45 Florida Statutes, the following-described property set forth in said Final Judgment of Foreclosure:

Lots 14 and 15, Block 3890, Unit 53, CAPE CORAL SUBDIVISION, according to the map or plat thereof, as recorded in Plat Book 19, Pages 64 through 78, inclusive, of the Public Records of Lee County, Florida.

Together with all rents, issues and profits.

Property Address: 2141 N.W. 21st Place, Cape Coral, Florida 33993

Any person claiming an interest in the surplus from the sale, if any, other than the property owner as of the date of the Lis Pendens must file a claim in accordance with Florida Statutes, Section 45.031.

[1] Amended for the sole purposes to correct the typographical error of the address under title of pleading to reflect the correct subject property address to be 2141 NW 21st Place, Cape Coral, Florida 33993).

10/08/2026

(SEAL) T Mann
Kevin C. Karnes
CLERK OF COURT
LEE COUNTY, FLORIDA
by Deputy Clerk

BURR & FORMAN LLP
201 N. Franklin Street, Suite 3200
Tampa, Florida 33602
Phone: (813) 221-2626
Facsimile: (813) 221-7335
Primary E-Mail Address:
rcohn@burr.com
Secondary E-mail Addresses:
dmorse@burr.com and
mguerra@burr.com
Attorneys for Plaintiff
By: /s/ Ronald B. Cohn
Ronald B. Cohn, FBN 599786
October 16, 23, 2026 26-04392L

FIRST INSERTION

NOTICE TO CREDITORS
IN THE CIRCUIT COURT FOR LEE COUNTY, FLORIDA
PROBATE DIVISION
File No. 2026 CP 002852
Division: Probate
IN RE: ESTATE OF JUDITH A. KOTZ,
Deceased.

The administration of the estate of Judith A. Kotz, deceased, whose date of death was May 27, 2026, is pending in the Circuit Court for Lee County, Florida, Probate Division, the address of which is 1700 Monroe St., Fort Myers, FL 33901. The names and addresses of the personal representative and the personal representative's attorney are set forth below.

All creditors of the decedent and other persons having claims or demands against decedent's estate on whom a copy of this notice is required to be served must file their claims with this court ON OR BEFORE THE LATER OF 3 MONTHS AFTER THE TIME OF THE FIRST PUBLICATION OF THIS NOTICE OR 30 DAYS AFTER THE DATE OF SERVICE OF A COPY OF THIS NOTICE ON THEM.

All other creditors of the decedent and other persons having claims or demands against decedent's estate must file their claims with this court WITHIN 3 MONTHS AFTER THE DATE OF THE FIRST PUBLICATION OF THIS NOTICE.

The personal representative has no duty to discover whether any property held at the time of the decedent's death by the decedent or the decedent's surviving spouse is property to which the Florida Uniform Disposition of Community Property Rights at Death Act as described in ss. 732.216-732.228, Florida Statutes, applies, or may apply, unless a written demand is made by a creditor as specified under s. 732.2211, Florida Statutes. The written demand must be filed with the clerk.

ALL CLAIMS NOT FILED WITHIN THE TIME PERIODS SET FORTH IN FLORIDA STATUTES SECTION 733.702 WILL BE FOREVER BARRED.

NOTWITHSTANDING THE TIME PERIODS SET FORTH ABOVE, ANY CLAIM FILED TWO (2) YEARS OR MORE AFTER THE DECEDENT'S DATE OF DEATH IS BARRED.

The date of first publication of this notice is October 16, 2026.

Personal Representative:
Phillip J. Kotz, Jr.
William P. Kotz
c/o Ledbetter Cowan Law Group
229 Pensacola Rd.
Venice, FL 34285
Attorney for Personal Representative:
Ledbetter Cowan Law Group
Jada W. Terreros, Esq.,
FL Bar No. 1032584
Email: jada@LedbetteCowan.com
229 Pensacola Road,
Venice, Florida 34285
Tel: (941) 256-3965
Fax: (941) 866-7514
2nd Email:
probate@LedbetterCowan.com
October 16, 23, 2026 26-04475L

FIRST INSERTION

NOTICE OF FORECLOSURE SALE
IN THE CIRCUIT COURT OF THE TWENTIETH JUDICIAL CIRCUIT IN AND FOR LEE COUNTY, FLORIDA
CIVIL DIVISION
Case No. 26-CA-002314
THE TOWERS CONDOMINIUM ASSOCIATION, INC.
Plaintiff, v.
2366 E MALL RD PARTNERSHIP,
Defendants

NOTICE IS HEREBY GIVEN that, pursuant to a Final Summary Judgment of Foreclosure dated September 10, 2026, entered in Civil Case No. 2026-CA-002314 of the Circuit Court of the Twentieth Judicial Circuit in and for Lee County, I will sell to the Highest and Best Bidder for Cash by electronic sale beginning at 9:00 a.m. on the prescribed date at www.lee.realforeclose.com on the 29th day of October, 2026, the following described property as set forth in said Final Judgment, to-wit:

Unit 101, Building 1, The Towers Condominium, a Condominium, according to the Declaration of Condominium thereof, recorded in O.R. Book 1411, Pg. 1262, and all amendements thereto, of the Public Records of Lee County, Florida, together with an undivided interest in the common elements appurtenant thereto (the "Property").

Street Address: 2366 E. Mall Drive #101, Fort Myers, Florida 33901

Any person claiming an interest in the surplus from the sale, if any, other than the property owner as of the date of the Lis Pendens must file a claim in accordance with Florida Statutes, Section 45.031.

Dated day of 10/08/2026,

Kevin C. Karnes
Clerk of Court
(SEAL) By: N Wright-Angad
Deputy Clerk

October 16, 23, 2026 26-04414L

FIRST INSERTION

NOTICE OF FORECLOSURE SALE
IN THE CIRCUIT COURT OF THE 20TH JUDICIAL CIRCUIT, IN AND FOR LEE COUNTY, FLORIDA
CIVIL DIVISION:
CASE NO.: 25-CA-003831
LAKEVIEW LOAN SERVICING, LLC,
Plaintiff, vs.
JOSE DANIEL CALES; FLORIDA HOUSING FINANCE CORPORATION; JOSE ANGEL CALES; CARMEN CINDY CALES; UNKNOWN TENANT
Defendants

NOTICE IS HEREBY GIVEN pursuant to an Order or Final Judgment entered in the above styled cause now pending in said court and as required by Florida Statute 45.031(2), KEVIN C. KARNES as the Clerk of the Circuit Court for LEE County shall sell to the highest and best bidder for cash electronically at www.Lee.realforeclose.com at, 9:00 AM on the 05 day of November, 2026, the following described property as set forth in said Final Judgment, to wit:

LOTS 15 AND 16, BLOCK 5816, UNIT 88, CAPE CORAL, A SUBDIVISION ACCORDING TO PLAT THEREOF, AS RECORDED IN PLAT BOOK 24, PAGES 127 THROUGH 143, INCLUSIVE, OF THE PUBLIC RECORDS OF LEE COUNTY, FLORIDA

PROPERTY ADDRESS: 4413 NE 21ST PL, CAPE CORAL, FL 33909

IF YOU ARE A PERSON CLAIMING A RIGHT TO FUNDS REMAINING AFTER THE SALE, YOU MUST FILE A CLAIM WITH THE CLERK NO LATER THAN THE DATE THAT THE CLERK REPORTS THE FUNDS AS UNCLAIMED. IF YOU FAIL TO FILE A CLAIM, YOU WILL NOT BE ENTITLED TO ANY REMAINING FUNDS. AFTER THE FUNDS ARE REPORTED AS UNCLAIMED, ONLY THE OWNER OF RECORD AS OF THE DATE OF THE LIS PENDENS MAY CLAIM THE SURPLUS.

Dated this 10/09/2026.

KEVIN C. KARNES
Clerk Of The Circuit Court
(SEAL) By: T Mann
Deputy Clerk

Submitted by:
De Cubas & Lewis, P.A.
PO Box 5026
Fort Lauderdale, FL 33310
Telephone: (954) 453-0365
Facsimile: (954) 771-6052
Toll Free: 1-800-441-2438
DESIGNATED PRIMARY E-MAIL FOR SERVICE PURSUANT TO FLA. R. JUD. ADMIN 2.516
eservice@decubaslewis.com
25-02534
October 16, 23, 2026 26-04418L

FIRST INSERTION

NOTICE OF SALE
IN THE CIRCUIT CIVIL COURT OF THE TWENTIETH JUDICIAL CIRCUIT OF FLORIDA, IN AND FOR LEE COUNTY
CIVIL DIVISION
Case No. 26-CA-001472
SUNCOAST CREDIT UNION, A FEDERALLY INSURED STATE CHARTERED CREDIT UNION
Plaintiff, vs.
MARK FREDERICK, CATHERINE FREDERICK, VENETIAN VILLAGE COMMUNITY ASSOCIATION, INC., AND UNKNOWN TENANTS/OWNERS,
Defendants.

Notice is hereby given, pursuant to Final Judgment of Foreclosure for Plaintiff entered in this cause on September 24, 2026, in the Circuit Court of Lee County, Florida, Kevin C. Karnes, Clerk of the Circuit Court, will sell the property situated in Lee County, Florida described as:

LOT 17, BLOCK A, ESTATES AT CASA DEL MAR, PHASE 1, ACCORDING TO THE MAP OR PLAT THEREOF, AS RECORDED IN PLAT BOOK 49, PAGE 58, OF THE PUBLIC RECORDS OF LEE COUNTY, FLORIDA.

and commonly known as: 9890 MAR LARGO CIR, FORT MYERS, FL 33919; including the building, appurtenances, and fixtures located therein, at public sale, to the highest and best bidder, for cash, at: [ ] www.lee.realforeclose.com on December 3, 2026 at 9:00 AM

Any persons claiming an interest in the surplus from the sale, if any, other than the property owner as of the date of the lis pendens must file a claim before the clerk reports the surplus as unclaimed.

Dated this 10/08/2026.

Clerk of the Circuit Court
Kevin C. Karnes
(SEAL) By: T Mann
Deputy Clerk

David Adamian
(813) 229-0900 x
Kass Shuler, P.A.
1604 N. Marion St.
Tampa, FL 33602
ForeclosureService@kasslaw.com
011150/2633619/and
October 16, 23, 2026 26-04393L

FIRST INSERTION

NOTICE OF FORECLOSURE SALE
IN THE CIRCUIT COURT OF THE TWENTIETH JUDICIAL CIRCUIT OF THE STATE OF FLORIDA, IN AND FOR LEE COUNTY, CIVIL DIVISION
CASE NO.: 2026-CA-002698
LAKEVIEW LOAN SERVICING, LLC,
Plaintiff, vs.
AUSTIN W. DECKER; MORGAN R. DECKER; VILLA MEDICI TOWNHOMES HOA, INC.,
Defendants.

NOTICE OF SALE IS HEREBY GIVEN pursuant to the Consent Final Judgment of Foreclosure entered on September 25, 2026, in Case No. 2026-CA-002698 of the Circuit Court of the Twentieth Judicial Circuit, in and for Lee County, Florida, wherein LAKEVIEW LOAN SERVICING, LLC, is Plaintiff, and AUSTIN W. DECKER, MORGAN R. DECKER, VILLA MEDICI TOWNHOMES HOA, INC., are Defendants, the Office of Kevin C. Karnes, Lee County Clerk of the Court, will sell to the highest and best bidder for cash beginning at 9:00 AM on-line at www.lee.realforeclose.com on October 29, 2026, in accordance with Section 45.031, Florida Statutes, the following described property as set forth in said Final Judgment, to wit:

LOT 4, BLOCK A, OF PORTOFINO SPRINGS, (A REPLAT OF PART OF LOT 2, HEALTHPARK FLORIDA EAST, AS RECORDED IN PLAT BOOK 68, PAGES 17 THROUGH 22), A SUBDIVISION ACCORDING TO THE PLAT THEREOF, AS RECORDED IN OFFICIAL RECORDS INSTRUMENT NUMBER #2014000078831, OF THE PUBLIC RECORDS OF LEE COUNTY, FLORIDA.

Also known as: 15850 PORTOFINO SPGS BLVD, UNIT 104 FORT MYERS, FL 33908

together with all existing or subsequently erected or affixed buildings, improvements and fixtures.

Any person claiming an interest in the surplus funds from the sale, if any, other than the property owner as of the date of the lis pendens, must file a claim in accordance with Florida Statutes, Section 45.031.

Dated 10/08/2026

KEVIN C. KARNES
Clerk of the Circuit Court
(SEAL) By: N Wright-Angad
As Deputy Clerk

SOKOLOF REMTULLA, LLP
Counsel for Plaintiff
scruz@sokrem.com
pleadings@sokrem.com
October 16, 23, 2026 26-04415L

FIRST INSERTION

NOTICE OF FORECLOSURE SALE
IN THE CIRCUIT COURT OF THE TWENTIETH JUDICIAL CIRCUIT OF FLORIDA IN AND FOR LEE COUNTY
GENERAL JURISDICTION DIVISION
CASE NO. 25-CA-005618
FBC MORTGAGE, LLC,
Plaintiff, vs.
CRAIG ALLEN KINCAID A/K/A CRAIG A. KINCAID A/K/A CRAIG KINCAID, et al.,
Defendant.

NOTICE IS HEREBY GIVEN pursuant to a Summary Final Judgment of Foreclosure entered May 27, 2026 in Civil Case No. 25-CA-005618 of the Circuit Court of the TWENTIETH JUDICIAL CIRCUIT in and for Lee County, Ft. Myers, Florida, wherein FBC MORTGAGE, LLC is Plaintiff and Craig Allen Kincaid a/k/a Craig A. Kincaid a/k/a Craig Kincaid, et al., are Defendants, the Clerk of Court, Kevin C. Karnes, will sell to the highest and best bidder for cash at www.lee.realforeclose.com in accordance with Chapter 45, Florida Statutes on the 5th day of November, 2026 at 9:00 AM on the following described property as set forth in said Summary Final Judgment, to-wit:

Lot 131, Unit Two Spring Woods Mobile Home Subdivision, according to the plat thereof as recorded in Plat Book 42, Page 56 through 58, inclusive, of the Public Records of Lee County, Florida.

Together with 2006 ScotBilt Doublewide Mobile VIN No. SBHGA1050601490A and SBHGA1050601490B.

Address: 2490 Brownell Ct, North Fort Myers, FL 33917

Any person claiming an interest in the surplus from the sale, if any, other than the property owner as of the date of the lis pendens, must file a claim before the clerk reports the surplus as unclaimed.

Dated this day of 10/08/2026

Kevin C. Karnes
Deputy Clerk
CLERK OF THE CIRCUIT COURT
As Clerk of the Court
(SEAL) BY: N Wright-Angad

McCalla Raymer Leibert Pierce, LLP
110 SE 6th Street, Suite 2300
Fort Lauderdale, FL 33301
AccountsPayable@mccalla.com
Counsel of Plaintiff
21-03775FL
October 16, 23, 2026 26-04417L

FIRST INSERTION

NOTICE OF FORECLOSURE SALE
IN THE CIRCUIT COURT OF THE 20TH JUDICIAL CIRCUIT, IN AND FOR LEE COUNTY, FLORIDA
CIVIL DIVISION:
CASE NO.: 26-CA-002995
SELECT PORTFOLIO SERVICING, INC.,
Plaintiff, vs.
ZULEIDYS CEPERO CARTAYA; RICARDO ACOSTA SR; UNKNOWN SPOUSE OF ZULEIDYS CEPERO CARTAYA
Defendants.

NOTICE IS HEREBY GIVEN pursuant to an Order or Final Judgment entered in the above styled cause now pending in said court and as required by Florida Statute 45.031(2), KEVIN C. KARNES as the Clerk of the Circuit Court for LEE County shall sell to the highest and best bidder for cash electronically at www.Lee.realforeclose.com at, 9:00 AM on the 05 day of November, 2026, the following described property as set forth in said Final Judgment, to wit:

LOTS 70 AND 71, BLOCK 3646, OF CAPE CORAL UNIT 48, ACCORDING TO THE PLAT THEREOF, AS RECORDED IN PLAT BOOK 17, PAGES 135 THROUGH 144, INCLUSIVE, OF THE PUBLIC RECORDS OF LEE COUNTY, FLORIDA.

PROPERTY ADDRESS: 909 NW EMBERS TER, CAPE CORAL, FL 33993

IF YOU ARE A PERSON CLAIMING A RIGHT TO FUNDS REMAINING AFTER THE SALE, YOU MUST FILE A CLAIM WITH THE CLERK NO LATER THAN THE DATE THAT THE CLERK REPORTS THE FUNDS AS UNCLAIMED. IF YOU FAIL TO FILE A CLAIM, YOU WILL NOT BE ENTITLED TO ANY REMAINING FUNDS. AFTER THE FUNDS ARE REPORTED AS UNCLAIMED, ONLY THE OWNER OF RECORD AS OF THE DATE OF THE LIS PENDENS MAY CLAIM THE SURPLUS.

Dated this 10/09/2026.

KEVIN C. KARNES
Clerk Of The Circuit Court
(SEAL) By: T Mann
Deputy Clerk

Submitted by:
De Cubas & Lewis, P.A.
PO Box 5026
Fort Lauderdale, FL 33310
Telephone: (954) 453-0365
Facsimile: (954) 771-6052
Toll Free: 1-800-441-2438
DESIGNATED PRIMARY E-MAIL FOR SERVICE PURSUANT TO FLA. R. JUD. ADMIN 2.516
eservice@decubaslewis.com
25-04492
October 16, 23, 2026 26-04413L

FIRST INSERTION

NOTICE OF ACTION BY PUBLICATION
IN THE COUNTY COURT OF THE TWENTIETH JUDICIAL CIRCUIT IN AND FOR LEE COUNTY, FLORIDA
DIVISION: CIVIL
CASE NO. 26-CC-007077
CASA YBEL BEACH AND RACQUET CLUB, PHASE I-J-K, CONDOMINIUM ASSOCIATION, INC., A FLORIDA NON-PROFIT CORPORATION, a Florida non-profit corporation,
Plaintiff, vs.
KAREN R. CORDRY, MARCIA BOVE, AND THE UNKNOWN HEIRS, DEVISEES, GRANTEES, ASSIGNEES, LIENORS, CREDITORS, TRUSTEES, OR OTHER CLAIMANTS CLAIMING BY, THROUGH, UNDER OR AGAINST KAREN R. CORDRY,
Defendants.

TO: KAREN R. CORDRY, MARCIA BOVE, AND THE UNKNOWN HEIRS, DEVISEES, GRANTEES, ASSIGNEES, LIENORS, CREDITORS, TRUSTEES, OR OTHER CLAIMANTS CLAIMING BY, THROUGH, UNDER OR AGAINST KAREN R. CORDRY
LAST KNOWN ADDRESS: 10705 TORRANCE DR., SILVER SPRING, MD 20902-4718

YOU ARE HEREBY notified that an action to foreclose a Claim of Lien upon the following described real property located in Lee County, Florida:

Unit Week No. 50, in Condominium Parcel No. 171, of CASA YBEL BEACH AND RACQUET CLUB, PHASE I -J-K, a condominium, together with an undivided interest in the common elements appurtenant thereto, according to the Declaration of Condominium thereof recorded i n Official Records Book 1566, Page 2305, in the Public Records of Lee County, Florida.

has been filed against you and you are required to serve a copy of your written defenses, if any, upon Michael J. Belle, Esq., of Michael J. Belle, P.A., Attorney for Plaintiff, whose address is 2364 Fruitville Road, Sarasota, Florida 34237, within 30 days from the first date of publication, and file the original with the Clerk of this Court either before service on Plaintiff's attorney or immediately thereafter; otherwise, a default will be entered against you for the relief demanded in the Plaintiff's Complaint.

WITNESS my hand and seal of this Court on this 12th day of October, 2026

KEVIN C. KARNES,
CLERK OF COURTS
(SEAL) By: K Shoap
Deputy Clerk

Michael J. Belle, Esq.,
Michael J. Belle, P.A.
Attorney for Plaintiff
2364 Fruitville Road,
Sarasota, Florida 34237
service@michaelbelle.com
October 16, 23, 2026 26-04450L

FIRST INSERTION

NOTICE OF FORECLOSURE SALE
IN THE CIRCUIT COURT OF THE TWENTIETH JUDICIAL CIRCUIT OF FLORIDA IN AND FOR LEE COUNTY
GENERAL JURISDICTION DIVISION
CASE NO. 26-CA-000068
SELENE FINANCE LP,
Plaintiff, vs.
TRACIE C MACLAUGHLIN, et al.,
Defendant.

NOTICE IS HEREBY GIVEN pursuant to a Summary Final Judgment of Foreclosure entered May 9, 2026 in Civil Case No. 26-CA-000068 of the Circuit Court of the TWENTIETH JUDICIAL CIRCUIT in and for Lee County, Ft. Myers, Florida, wherein SELENE FINANCE LP is Plaintiff and Tracie C Maclaughlin, et al., are Defendants, the Clerk of Court, Kevin C. Karnes, will sell to the highest and best bidder for cash at www.lee.realforeclose.com in accordance with Chapter 45, Florida Statutes on November 5, 2026 at 9:00 AM on the following described property as set forth in said Summary Final Judgment, to-wit:

Lot 225, of RESERVE AT ESTERO, according to the Plat thereof as recorded in Plat Book 82, Page 51, Public Records of Lee County, Florida.

Address: 9064 Astonia Way, Estero, FL 33967

Any person claiming an interest in the surplus from the sale, if any, other than the property owner as of the date of the lis pendens, must file a claim before the clerk reports the surplus as unclaimed.

Dated this 10/09/2026.

Kevin C. Karnes
Deputy Clerk
CLERK OF THE CIRCUIT COURT
As Clerk of the Court
(SEAL) BY: T Mann

McCalla Raymer Leibert Pierce, LLP
110 SE 6th Street, Suite 2300
Fort Lauderdale, FL 33301
AccountsPayable@mccalla.com
Counsel of Plaintiff
25-14534FL
October 16, 23, 2026 26-04420L

--- ACTIONS / SALES ---

FIRST INSERTION

NOTICE OF ACTION
IN THE CIRCUIT COURT OF THE 20TH JUDICIAL CIRCUIT IN AND FOR LEE COUNTY, FLORIDA
CASE NO.: 26-CA-004496
FIRST OPTION MORTGAGE, LLC,
Plaintiff, vs.
KEVIN DENNIS MCCAMPBELL A/K/A KEVIN MCCAMPBELL; SHERRY MCCAMPBELL; TROPIC TERRACE CONDOMINIUM ASSOCIATION, UNITS 11 & 12, INC.,
Defendant(s).

TO: Kevin Dennis McCampbell a/k/a Kevin McCampbell
Residence Unknown

YOU ARE NOTIFIED that an action to foreclose a mortgage on the following described property in Lee County, Florida:

UNIT 1113, BUILDING 11, TROPIC TERRACE CONDOMINIUM UNITS 11 AND 12, A CONDOMINIUM, ALL AS SET FORTH IN THE DECLARATION OF CONDOMINIUM AND THE EXHIBITS ATTACHED THERETO AND FORMING A PART THEREOF, AS RECORDED IN OFFICIAL RECORDS BOOK 322, PAGE 713, AND ALL AMENDMENTS THERETO, OF THE PUBLIC RECORDS OF LEE COUNTY, FLORIDA. THE ABOVE DESCRIPTION INCLUDES, BUT IS NOT LIMITED TO, ALL APPURTENANCES TO THE CONDOMINIUM UNIT ABOVE DESCRIBED, INCLUDING THE UNDIVIDED INTEREST IN THE COMMON ELEMENTS OF SAID CONDOMINIUM.

Street Address: 1113 Tropic Terrace, North Fort Myers, Florida 33903

has been filed against you and you are required to serve a copy of your written defenses, if any, to it on McCabe, Weisberg & Conway, LLC, Plaintiff's attorney, whose address is 3222 Commerce Place, Suite A, West Palm Beach, FL 33407, within 30 days after the date of the first publication of this notice and file the original with the Clerk of this Court, otherwise, a default will be entered against you for the relief demanded in the complaint or petition.

If you are a person with a disability who needs any accommodation in order to participate in this proceeding, you are entitled, at no cost to you, to the provision of certain assistance. Please contact Brooke Dean, Operations Division Manager, whose office is located at Lee County Justice Center, 1700 Monroe Street, Fort Myers, Florida 33901, and whose telephone number is (239) 533-1771, at least 7 days before your scheduled court appearance, or immediately upon receiving this notification if the time before the scheduled appearance is less than 7 days; if you are hearing or voice impaired, call 711.

Dated on October 08, 2026.

Kevin C. Karnes
Clerk of said Court
(SEAL) By: K Shoap
As Deputy Clerk

McCabe, Weisberg & Conway, LLC
3222 Commerce Place, Suite A
West Palm Beach, FL 33407
Telephone: (561) 713-1400
FLpleadings@MWC-law.com
File#:26-400307
October 16, 23, 2026 26-04396L

FIRST INSERTION

NOTICE OF SALE PURSUANT TO CHAPTER 45
IN THE CIRCUIT COURT OF THE 20TH JUDICIAL CIRCUIT IN AND FOR LEE COUNTY, FLORIDA
CASE NO.: 26-CA-002305
CARRINGTON MORTGAGE SERVICES LLC,
Plaintiff, vs.
MAYA MALARIN A/K/A MAYA J. MALARIN; MAYA MALARIN A/K/A MAYA J. MALARIN AS TRUSTEE OF THE UNDERWOOD-MALARIN TRUST AGREEMENT DATED NOVEMBER 28, 2006, AMENDED AND RESTATED JUNE 19, 2013; UNITED STATES OF AMERICA ON BEHALF OF THE SECRETARY OF HOUSING AND URBAN DEVELOPMENT,
Defendant(s).

NOTICE OF SALE IS HEREBY GIVEN pursuant to the order of Summary Final Judgment of Foreclosure dated September 30, 2026, and entered in Case No. 26-CA-002305 of the Circuit Court of the 20TH Judicial Circuit in and for Lee County, Florida, wherein Carrington Mortgage Services LLC, is Plaintiff And Maya Malarin a/k/a Maya J. Malarin; Maya Malarin a/k/a Maya J. Malarin As Trustee Of The Underwood-Malarin Trust Agreement Dated November 28, 2006, Amended And Restated June 19, 2013; United States Of America On Behalf Of The Secretary Of Housing And Urban Development, are Defendants, the Office of the Clerk of Kevin Karnes, Lee County Clerk of the Court will sell via online auction at www.lee.realforeclose.com at 9:00 a.m. on the 3rd day of December, 2026, the following described property as set forth in said Final Judgment, to wit:

LOTS 7 AND 8, BLOCK 115, UNIT 5, CAPE CORAL SUBDIVISION, ACCORDING TO THE MAP OR PLAT THEREOF, AS RECORDED IN PLAT BOOK 11, PAGE(S) 80 THROUGH 90, INCLUSIVE, OF THE PUBLIC RECORDS OF LEE COUNTY, FLORIDA.

Property Address: 716 Sesame Court, Cape Coral, Florida 33904

and all fixtures and personal property located therein or thereon, which are included as security in Plaintiff's mortgage.

Any person claiming an interest in the surplus funds from the sale, if any, other than the property owner as of the date of the lis pendens must file a claim before the clerk reports the surplus as unclaimed.

Dated: 10/14/2026

Kevin Karnes
As Clerk of said Court
(SEAL) By: N Wright-Angad
As Deputy Clerk

McCabe, Weisberg & Conway, LLC
3222 Commerce Place, Suite A
West Palm Beach, Florida, 33407
Telephone: (561) 713-1400
Email: FLpleadings@mwc-law.com
File No: 26-400133
October 16, 23, 2026 26-04489L

FIRST INSERTION

NOTICE OF FORECLOSURE SALE
IN THE CIRCUIT COURT OF THE 20TH JUDICIAL CIRCUIT, IN AND FOR LEE COUNTY, FLORIDA
CIVIL DIVISION: T
CASE NO.: 26-CA-003101
LAKEVIEW LOAN SERVICING, LLC,
Plaintiff, vs.
RILEY LORAINE NORDWICK A/K/A RILEY LORRAINE NORDWICK AKA RILEY NORDWICK; HUNTER REES NORDWICK A/K/A HUNTER NORDWICK; JENNY LYNN NORDWICK A/K/A JENNY NORDWICK; UNKNOWN SPOUSE OF HUNTER REES NORDWICK AKA HUNTER NORDWICK; UNKNOWN SPOUSE OF JENNY LYNN NORDWICK AKA JENNY NORDWICK; UNKNOWN SPOUSE OF RILEY LORAINE NORDWICK AKA RILEY LORRAINE NORDWICK AKA RILEY NORDWICK
Defendants.

NOTICE IS HEREBY GIVEN pursuant to an Order or Final Judgment entered in the above styled cause now pending in said court and as required by Florida Statute 45.031(2), KEVIN C. KARNES as the Clerk of the Circuit Court for LEE County shall sell to the highest and best bidder for cash electronically at www.Lee.realforeclose.com at, 9:00 AM on the 05 day of November, 2026, the following described property as set forth in said Final Judgment, to wit:

LOTS 29 AND 30, BLOCK 785, CAPE CORAL SUBDIVISION, UNIT 22, ACCORDING TO THE MAP OR PLAT THEREOF, AS RECORDED IN PLAT BOOK 14, PAGES 1 THROUGH 16, INCLUSIVE, OF THE PUBLIC RECORDS OF LEE COUNTY, FLORIDA.

PROPERTY ADDRESS: 1311 SE 11TH ST, CAPE CORAL, FL 33990

IF YOU ARE A PERSON CLAIMING A RIGHT TO FUNDS REMAINING AFTER THE SALE, YOU MUST FILE A CLAIM WITH THE CLERK NO LATER THAN THE DATE THAT THE CLERK REPORTS THE FUNDS AS UNCLAIMED. IF YOU FAIL TO FILE A CLAIM, YOU WILL NOT BE ENTITLED TO ANY REMAINING FUNDS. AFTER THE FUNDS ARE REPORTED AS UNCLAIMED, ONLY THE OWNER OF RECORD AS OF THE DATE OF THE LIS PENDENS MAY CLAIM THE SURPLUS.

Dated this day of 10/09/2026.

KEVIN C. KARNES
Clerk Of The Circuit Court
(SEAL) By: N Wright-Angad
Deputy Clerk

Submitted by:
De Cubas & Lewis, P.A.
PO Box 5026
Fort Lauderdale, FL 33310
Telephone: (954) 453-0365
Facsimile: (954) 771-6052
Toll Free: 1-800-441-2438
DESIGNATED PRIMARY E-MAIL FOR SERVICE PURSUANT TO FLA. R. JUD. ADMIN 2.516
eservice@decubaslewis.com
26-01627
October 16, 23, 2026 26-04419L

FIRST INSERTION

NOTICE OF FORECLOSURE SALE
IN THE CIRCUIT COURT OF THE TWENTIETH JUDICIAL CIRCUIT OF FLORIDA IN AND FOR LEE COUNTY
GENERAL JURISDICTION DIVISION
CASE NO. 25-CA-006629
ROCKET MORTGAGE, LLC F/K/A QUICKEN LOANS, LLC,
Plaintiff, vs.
STEPHEN WHITNEY, et al.,
Defendant.

NOTICE IS HEREBY GIVEN pursuant to a Summary Final Judgment of Foreclosure entered September 18, 2026 in Civil Case No. 25-CA-006629 of the Circuit Court of the TWENTIETH JUDICIAL CIRCUIT in and for Lee County, Ft. Myers, Florida, wherein ROCKET MORTGAGE, LLC F/K/A QUICKEN LOANS, LLC is Plaintiff and Stephen Whitney, et al., are Defendants, the Clerk of Court, Kevin C. Karnes, will sell to the highest and best bidder for cash at www.lee.realforeclose.com in accordance with Chapter 45, Florida Statutes November 5, 2026 at 9:00 AM on the following described property as set forth in said Summary Final Judgment, to-wit:

The West 169 feet of the West 338 feet of the South 1/2 of the Southwest 1/4 of the Southeast 1/4 of the Southwest 1/4, of Section 6, Township 43 South, Range 25 East, of Lee County, Florida.

Parcel Number: 06-43-25-01-00000.016B

Address: 6231 Nalle Grade Rd, North Fort Myers, FL 33917

Any person claiming an interest in the surplus from the sale, if any, other than the property owner as of the date of the lis pendens, must file a claim before the clerk reports the surplus as unclaimed.

Dated this 10/09/2026.

Kevin Karnes
Deputy Clerk
CLERK OF THE CIRCUIT COURT
As Clerk of the Court
(SEAL) BY: T Mann

McCalla Raymer Leibert Pierce, LLP
110 SE 6th Street, Suite 2300
Fort Lauderdale, FL 33301
AccountsPayable@mccalla.com
Counsel of Plaintiff
25-13841FL
October 16, 23, 2026 26-04422L

FIRST INSERTION

NOTICE OF FORECLOSURE SALE
IN THE COUNTY COURT OF THE TWENTIETH JUDICIAL CIRCUIT IN AND FOR LEE COUNTY, FLORIDA
DIVISION: CIVIL
CASE NO. 26-CC-006113
THE SOUTH SEAS CLUB CONDOMINIUM ASSOCIATION, INC., a Florida non-profit corporation,
Plaintiff, vs.
PRISCILLA COLE ILL; DEBORAH DELGUERCIO; HEATHER Z. LANG; PETER H. ILL, JR.; AND THE UNKNOWN HEIRS, DEVISEES, GRANTEES, ASSIGNEES, LIENORS, CREDITORS, TRUSTEES, OR OTHER CLAIMANTS CLAIMING BY, THROUGH, UNDER OR AGAINST PRISCILLA COLE ILL,
Defendant.

NOTICE is hereby given that the undersigned, Clerk of Circuit and County Courts of Lee County, Florida, will on November 19, 2026, at 9:00 A.M. via electronic sale at www.lee.realforeclose.com, in accordance with Section 45.031, Florida Statutes, offer for sale and sell to the highest bidder for cash, the following described property situated in Lee County, Florida:

Unit Week No. 46 in Condominium Parcel Number A of THE SOUTH SEAS CLUB, a Condominium according to the declaration of Condominium thereof, recorded in Official Records Book 1480 at Page 970, of the Public Records of Lee County, Florida, and all amendment thereto, if any.

A/K/A UNIT 1301, WEEK 46

pursuant to the Final Judgment of Lien Foreclosure entered in a case pending in said Court in the above-styled cause.

Any person claiming an interest in the surplus from the sale, if any, other than the property owner as of the date of the Lis Pendens must file a claim in accordance with Florida Statutes, Section 45.031.

WITNESS my hand and official seal of said Court this 10/09/2026.

KEVIN C. KARNES,
CLERK OF COURT
(SEAL) By: T Mann
Deputy Clerk

Michael J. Belle, Esquire
Attorney for Plaintiff
service@michaelbelle.com
50713
October 16, 23, 2026 26-04438L

FIRST INSERTION

NOTICE OF FORECLOSURE SALE
IN THE CIRCUIT COURT FOR THE TWENTIETH JUDICIAL CIRCUIT IN AND FOR LEE COUNTY, FLORIDA
CIRCUIT CIVIL DIVISION
CASE NO.: 25-CA-004362
METROPOLITAN LIFE INSURANCE COMPANY
Plaintiff(s), vs.
NICOLE PEREZ; MATTHEW DEMELLO; LISSETTE MARIE LUACES; NORMA LUACES; PALMETTO SOLAR, LLC DBA LIGHTREACH
Defendant(s).

NOTICE IS HEREBY GIVEN THAT, pursuant to Plaintiff's Final Judgment of Foreclosure entered on October 7, 2026 in the above-captioned action, the Clerk of Court will sell to the highest and best bidder for cash at www.lee.realforeclose.com in accordance with Chapter 45, Florida Statutes on the 5th day of November, 2026 at 09:00 AM on the following described property as set forth in said Final Judgment of Foreclosure or order, to wit:

LOTS 47 AND 48, BLOCK 3305, CAPE CORAL UNIT 66, ACCORDING TO THE PLAT THEREOF, RECORDED IN PLAT BOOK 22, PAGE 2, OF THE PUBLIC RECORDS OF LEE COUNTY, FLORIDA.

Property address: 3746 Southwest 11th Avenue, Cape Coral, FL 33914

Any person claiming an interest in the surplus from the sale, if any, other than the property owner as of the date of the lis pendens, must file a claim before the clerk reports the surplus as unclaimed.

In accordance with Rule of General Practice and Judicial administration 2.515, the undersigned represents that the legal authorities identified herein exist and are accurately cited.

10/09/2026

Kevin Karnes
CLERK OF THE CIRCUIT COURT
As Clerk of the Court
(SEAL) BY: N Wright-Angad
Deputy Clerk

Padgett Law Group,
Attorney for Plaintiff
6267 Old Water Oak Road, Suite 203
Tallahassee, FL 32312
attorney@padgettlawgroup.com
TDP File No. 25-003245-2
October 16, 23, 2026 26-04421L

FIRST INSERTION

NOTICE OF ACTION BY PUBLICATION
IN THE COUNTY COURT OF THE TWENTIETH JUDICIAL CIRCUIT IN AND FOR LEE COUNTY, FLORIDA
DIVISION: CIVIL
CASE NO. 26-CC-006256
PLANTATION BEACH CLUB II OWNERS' ASSOCIATION, INC., A FLORIDA NON-PROFIT CORPORATION, a Florida non-profit corporation,
Plaintiff, vs.
DANIELLE E. CHARD,
Defendant(s).

TO: DANIELLE E. CHARD
Last Known Address: 2225 HERON CIR., CLEARWATER, FL 33762

YOU ARE HEREBY notified that an action to foreclose a Claim of Lien upon the following described real property located in Lee County, Florida:

Unit Week 49 in Condominium Parcel Letter C of PLANTATION BEACH CLUB II, PHASE 2, a Condominium according to the Declaration of Condominium thereof, as recorded in Official Records Book 1322 at Page 1470 in the Public Records of Lee County Florida and all amendments thereto, if any.

A/K/A UNIT 1031, WEEK 49

has been filed against you and you are required to serve a copy of your written defenses, if any, upon Michael J. Belle, Esq., of Michael J. Belle, P.A., Attorney for Plaintiff, whose address is 2364 Fruitville Road, Sarasota, Florida 34237, within 30 days from the first date of publication, and file the original with the Clerk of this Court either before service on Plaintiff's attorney or immediately thereafter; otherwise, a default will be entered against you for the relief demanded in the Plaintiff's Complaint.

WITNESS my hand and seal of this Court on this 8th day of October, 2026.

KEVIN C. KARNES,
CLERK OF COURTS
(SEAL) By: K Shoap
Deputy Clerk

Michael J. Belle, Esq.,
Michael J. Belle, P.A.,
Attorney for Plaintiff,
2364 Fruitville Road,
Sarasota, Florida 34237
service@michaelbelle.com
October 16, 23, 2026 26-04397L

FIRST INSERTION

NOTICE OF FORECLOSURE SALE
IN THE CIRCUIT COURT OF THE TWENTIETH JUDICIAL CIRCUIT OF FLORIDA IN AND FOR LEE COUNTY
GENERAL JURISDICTION DIVISION
CASE NO. 26-CA-001138
NEWREZ LLC,
Plaintiff, vs.
PAUL LIONETTI, AS TRUSTEE UNDER THE 3734 SE 3RD PL LAND TRUST DATED JUNE 23, 2025, et al.,
Defendant.

NOTICE IS HEREBY GIVEN pursuant to a Summary Final Judgment of Foreclosure entered September 18, 2026 in Civil Case No. 26-CA-001138 of the Circuit Court of the TWENTIETH JUDICIAL CIRCUIT in and for Lee County, Ft. Myers, Florida, wherein NEWREZ LLC is Plaintiff and Paul Lionetti, as Trustee under the 3734 SE 3rd Pl Land Trust dated June 23, 2025, et al., are Defendants, the Clerk of Court, Kevin C. Karnes, will sell to the highest and best bidder for cash at www.lee.realforeclose.com in accordance with Chapter 45, Florida Statutes on the 5 day of November, 2026 at 9:00 AM on the following described property as set forth in said Summary Final Judgment, to-wit:

Lots 63 and 64, Block 840, Cape Coral Subdivision, Unit 26, according to plat thereof as recorded in Plat Book 14, Pages 117 through 148, inclusive, of the Public Records of Lee County, Florida.

Address: 3734 SE 3Rd Pl, Cape Coral, FL 33904

Any person claiming an interest in the surplus from the sale, if any, other than the property owner as of the date of the lis pendens, must file a claim before the clerk reports the surplus as unclaimed.

Dated this day of 10/09/2026

Kevin C. Karnes
Deputy Clerk
CLERK OF THE CIRCUIT COURT
As Clerk of the Court
(SEAL) BY: N Wright-Angad

McCalla Raymer Leibert Pierce, LLP
110 SE 6th Street, Suite 2300
Fort Lauderdale, FL 33301
AccountsPayable@mccalla.com
Counsel of Plaintiff
25-19683FL
October 16, 23, 2026 26-04425L

FIRST INSERTION

NOTICE OF SALE
IN THE CIRCUIT COURT OF THE TWENTIETH JUDICIAL CIRCUIT IN AND FOR LEE COUNTY, FLORIDA
CASE NO.: 24-CA-7786
HERC RENTALS, INC.
Plaintiff, v.
EG2 HOMES, LLC, NELSON DELGADO, FORT MYERS CONSTRUCTION, LLC, and FUNDVATE 26, LLC,
Defendants.

NOTICE OF SALE PURSUANT TO CHAPTER 45 F.S. IS HEREBY GIVEN THAT, pursuant to the Final Judgment After Default entered on November 4, 2025, in the Circuit Court of the Twentieth Judicial Circuit, in and for Lee County, Florida, Case No. 2024-CA-007786, wherein Herc Rentals, Inc., is the Plaintiff, and EG2 Homes, LLC, Nelson Delgado, Fort Myers Construction, LLC, and Fundvate 26, LLC are the Defendants, the Lee County Clerk of Court, Kevin C. Karnes, will sell to the highest bidder for cash, by electronic sale at https://www.lee.realforeclose.com (website), on November 5, 2026 beginning at 9:00 a.m. the following property situated in Lee County, Florida:

Lot 5, Block 109, Unit 12, Section 35, Township 44 South, Range 26 East, Lehigh Acres, according to the map or plat thereof, as recorded in plat Book 15, Page(s) 91, of the Public Records of Lee County, Florida.

Property Address: 3118 15th Street SW, Lehigh Acres, Florida, 33976.

Any person claiming an interest in the surplus from the sale, if any, other than the property owner as of the date of the lis pendens must file a claim before the clerk reports the surplus as unclaimed.

Dated at Fort Myers, Florida, 10/12/2026.

KEVIN C. KARNES
CLERK OF THE CIRCUIT COURT
(SEAL) By: T Mann
Deputy Clerk

Heather A. DeGrave, Esq.
Sara S. Jawad, Esq.
HAHN LOESER & PARKS LLP
The Bank of Tampa Building
601 Bayshore Boulevard, Ste. 720
Tampa, FL 33606
Phone: (813) 254-7474
October 16, 23, 2026 26-04454L

FIRST INSERTION

NOTICE OF SALE
IN THE CIRCUIT COURT OF THE TWENTIETH JUDICIAL CIRCUIT IN AND FOR LEE COUNTY, FLORIDA
CASE NO. 26-CA-000743
PLANET HOME LENDING, LLC,
Plaintiff, vs.
BREANNA DANAE CHRISTY; MATTHEW STEPHEN CHRISTY, et al.,
Defendants.

NOTICE IS HEREBY GIVEN, that following the trial scheduled for September 24, 2026, and in accordance with the Final Judgment entered in Case No. 26-CA-000743, in the Circuit Court of the Twentieth Judicial Circuit in and for Lee County, Florida, wherein Planet Home Lending, LLC, is the Plaintiff and Breanna Danae Christy; Matthew Stephen Christy; et. al., are the Defendants. The Clerk of Circuit Court for Lee County, Florida will sell to the highest and best bidder for cash at www.lee.realforeclose.com, the Clerk's website for online auctions at 9:00 AM, on February 4, 2027 the following described property as set forth in said Final Judgment of Foreclosure, to wit:

LOT 9, BLOCK 53, UNIT 9, LEHIGH ACRES SECTION 15, TOWNSHIP 45 SOUTH, RANGE 27 EAST, ACCORDING TO THE PLAT RECORDED IN PLAT BOOK 18, PAGES 36 THROUGH 52, PUBLIC RECORDS OF LEE COUNTY, FLORIDA.

Any person claiming an interest in the surplus from the sale, if any, other than the property owner as of the date of the Lis Pendens must file a claim in accordance with Florida Statutes, Section 45.031.

Date: 10/09/2026

Kevin C. Karnes
Clerk of Courts
(SEAL) N Wright-Angad
Deputy Clerk

ATLAS | SOLOMON, PLLC
Counsel for Plaintiffs
By: /s/ Eric S. Matthew
Eric S. Matthew, Esq.
Florida Bar No. 26539
Dorothy Ann A. Dlugolecki, Esq.
Florida Bar No. 1022496
819 SW Federal Hwy, Suite 301
Stuart, FL 34994
Tel: (772) 247-0157
E-mail: eric@atlas-solomon.com
dorothy@atlas-solomon.com
servicemailbox@atlas-solomon.com
October 16, 23, 2026 26-04423L

FIRST INSERTION

NOTICE OF FORECLOSURE SALE
IN THE CIRCUIT COURT OF THE TWENTIETH JUDICIAL CIRCUIT IN AND FOR LEE COUNTY, FLORIDA
CASE NO.: 25-CA-006208
LAKEVIEW LOAN SERVICING, LLC,
Plaintiff, v.
EVELYN DIAZ, et al.,
Defendants.

NOTICE is hereby given that Kevin C. Karnes, Clerk of the Circuit Court of Lee County, Florida, will on November 19, 2026, at 9:00 a.m. ET, via the online auction site at www.lee.realforeclose.com in accordance with Chapter 45, F.S., offer for sale and sell to the highest and best bidder for cash, the following described property situated in Lee County, Florida, to wit:

LOTS 39 AND 40, BLOCK 859, CAPE CORAL UNIT 26, A SUBDIVISION ACCORDING TO THE PLAT THEREOF RECORDED AT PLAT BOOK 14, PAGE 117 TO 148, IN THE PUBLIC RECORDS OF LEE COUNTY, FLORIDA.

Property Address: 3411 S.E. Santa Barbara Place, Cape Coral, FL 33904

pursuant to the Final Judgment of Foreclosure entered in a case pending in said Court, the style and case number of which is set forth above.

Any person claiming an interest in the surplus from the sale, if any, other than the property owner as of the date of the Lis Pendens must file a claim before the clerk reports the surplus as unclaimed.

If the sale is set aside for any reason, the Purchaser at the sale shall be entitled only to a return of the deposit paid. The Purchaser shall have no further recourse against the Mortgagor, the Mortgagee or the Mortgagee's attorney.

WITNESS my hand and official seal of this Honorable Court this 10/09/2026.

Kevin C. Karnes
Clerk of the Circuit Court
(SEAL) By: T Mann
DEPUTY CLERK

Tiffany & Bosco, P.A.
1201 S. Orlando Ave., Suite 430
Winter Park, FL 32789
floridaservice@tblaw.com
October 16, 23, 2026 26-04437L

--- ACTIONS / SALES ---

FIRST INSERTION

NOTICE OF FORECLOSURE SALE
IN THE CIRCUIT COURT OF THE TWENTIETH JUDICIAL CIRCUIT IN AND FOR LEE COUNTY, FLORIDA
CASE NO.: 26-CA-002267
LAKEVIEW LOAN SERVICING, LLC,
Plaintiff, v.
AMANDA ANNE COX, et al.,
Defendants.

NOTICE is hereby given that Kevin C. Karnes, Clerk of the Circuit Court of Lee County, Florida, will on November 19, 2026, at 9:00 a.m. ET, via the online auction site at www.lee.realforeclose.com in accordance with Chapter 45, F.S., offer for sale and sell to the highest and best bidder for cash, the following described property situated in Lee County, Florida, to wit:

Lots 13 and 14, Block 59, PLAT OF E. 1/2 UNIT 10 SECTION 36, TWP. 45 S., RGE. 27 E. A SUBDIVISION OF LEHIGH ACRES, according to the map or plat thereof, as recorded in Plat Book 28, Page(s) 66, of the Public Records of Lee County, Florida.

Property Address: 1228 Belgrave Street, Fort Myers, FL 33913

pursuant to the Final Judgment of Foreclosure entered in a case pending in said Court, the style and case number of which is set forth above.

Any person claiming an interest in the surplus from the sale, if any, other than the property owner as of the date of the Lis Pendens must file a claim before the clerk reports the surplus as unclaimed.

If the sale is set aside for any reason, the Purchaser at the sale shall be entitled only to a return of the deposit paid. The Purchaser shall have no further recourse against the Mortgagor, the Mortgagee or the Mortgagee's attorney.

WITNESS my hand and official seal of this Honorable Court this day of 10/09/2026

Kevin C. Karnes
Clerk of the Circuit Court
(SEAL) By: N Wright-Angad
DEPUTY CLERK

Tiffany & Bosco, P.A.
1201 S. Orlando Ave., Suite 430
Winter Park, FL 32789
floridaservice@tblaw.com
October 16, 23, 2026 26-04426L

FIRST INSERTION

NOTICE OF FORECLOSURE SALE
IN THE CIRCUIT COURT OF THE TWENTIETH JUDICIAL CIRCUIT OF FLORIDA IN AND FOR LEE COUNTY
GENERAL JURISDICTION DIVISION
CASE NO. 26-CA-000945
SERVIS ONE, INC. DBA BSI FINANCIAL SERVICES,
Plaintiff, vs.
ELIZABETH CORTESE, et al.,
Defendant.

NOTICE IS HEREBY GIVEN pursuant to a Summary Final Judgment of Foreclosure entered September 22, 2026 in Civil Case No. 26-CA-000945 of the Circuit Court of the TWENTIETH JUDICIAL CIRCUIT in and for Lee County, Ft. Myers, Florida, wherein SERVIS ONE, INC. DBA BSI FINANCIAL SERVICES is Plaintiff and Elizabeth Cortese, et al., are Defendants, the Clerk of Court, Kevin C. Karnes, will sell to the highest and best bidder for cash at www.lee.realforeclose.com in accordance with Chapter 45, Florida Statutes on the 5 day of November, 2026 at 9:00 AM on the following described property as set forth in said Summary Final Judgment, to-wit:

Lot 6, Block 67, Replat of Tract N-Unit 6, Section 11, Township 45 South, Range 26 East, Lehigh Acres, according to the map or plat thereof, as recorded in Plat Book 26, Page(s) 196, of the Public Records of Lee County, Florida.

Address: 3219 40th St SW, Lehigh Acres, FL 33976

Any person claiming an interest in the surplus from the sale, if any, other than the property owner as of the date of the lis pendens, must file a claim before the clerk reports the surplus as unclaimed.

Dated this day of 10/12/2026

Kevin C. Karnes
Deputy Clerk
CLERK OF THE CIRCUIT COURT
As Clerk of the Court
(SEAL) BY: N Wright-Angad

McCalla Raymer Leibert Pierce, LLP
110 SE 6th Street, Suite 2300
Fort Lauderdale, FL 33301
AccountsPayable@mccalla.com
Counsel of Plaintiff
25-15505FL
October 16, 23, 2026 26-04434L

FIRST INSERTION

NOTICE OF FORECLOSURE SALE
IN THE CIRCUIT COURT OF THE TWENTIETH JUDICIAL CIRCUIT IN AND FOR LEE COUNTY, FLORIDA
CASE NO.: 26-CA-002469
PENNYMAC LOAN SERVICES, LLC,
Plaintiff, v.
DALTON SHANE HOLLAN, et al.,
Defendants.

NOTICE is hereby given that Kevin C. Karnes, Clerk of the Circuit Court of Lee County, Florida, will on November 19, 2026, at 9:00 a.m. ET, via the online auction site at www.lee.realforeclose.com in accordance with Chapter 45, F.S., offer for sale and sell to the highest and best bidder for cash, the following described property situated in Lee County, Florida, to wit:

Lots 25 and 26, Block 2424, CAPE CORAL UNIT 34, a subdivision according to the plat or map thereof described in Plat Book 16, at Page(s) 74-86, of the Public Records of Lee County, Florida.

Property Address: 338 NE 9th Terrace, Cape Coral, FL 33909

pursuant to the Final Judgment of Foreclosure entered in a case pending in said Court, the style and case number of which is set forth above.

Any person claiming an interest in the surplus from the sale, if any, other than the property owner as of the date of the Lis Pendens must file a claim before the clerk reports the surplus as unclaimed.

If the sale is set aside for any reason, the Purchaser at the sale shall be entitled only to a return of the deposit paid. The Purchaser shall have no further recourse against the Mortgagor, the Mortgagee or the Mortgagee's attorney.

WITNESS my hand and official seal of this Honorable Court this October 9, 2026.

Kevin C. Karnes
Clerk of the Circuit Court
(SEAL) By: T Mann
DEPUTY CLERK

Tiffany & Bosco, P.A.
1201 S. Orlando Ave., Suite 430
Winter Park, FL 32789
floridaservice@tblaw.com
October 16, 23, 2026 26-04427L

FIRST INSERTION

NOTICE OF FORECLOSURE SALE
IN THE COUNTY COURT OF THE TWENTIETH JUDICIAL CIRCUIT IN AND FOR LEE COUNTY, FLORIDA
DIVISION: CIVIL
CASE NO. 26-CC-006223
PLANTATION BAY VILLAS OWNERS ASSOCIATION, INC., a Florida non-profit corporation,
Plaintiff, vs.
NICHOLAS S. MUTI AND ELLEN M. MUTI,
Defendant.

NOTICE is hereby given that the undersigned, Clerk of Circuit and County Courts of Lee County, Florida will on November 19, 2026, at 9:00 A.M. via electronic sale at www.lee.realforeclose.com, in accordance with Section 45.031, Florida Statutes, offer for sale and sell to the highest bidder for cash, the following described property situated in Lee County, Florida:

An undivided 1/204th interest as a tenant in common with other owners in the Resort Facility (PLANTATION BAY VILLAS) one Time Shares interest(s) according to the Time Sharing Plan thereof, recorded in Official Records Book 2168, Page 1706 through 1734, inclusive, of the Public Records of Lee County, Florida ("Plan"), as amended. Together with the right to occupy, pursuant to Plan, Unit 972 during Unit Week(s) 38.

pursuant to the Final Judgment of Lien Foreclosure entered in a case pending in said Court in the above-styled cause.

Any person claiming an interest in the surplus from the sale, if any, other than the property owner as of the date of the Lis Pendens must file a claim in accordance with Florida Statutes, Section 45.031.

WITNESS my hand and official seal of said Court this day of 10/12/2026,

KEVIN C. KARNES,
CLERK OF COURT
(SEAL) By: N Wright-Angad
Deputy Clerk

Michael J. Belle, Esquire
Attorney for Plaintiff
service@michaelbelle.com
October 16, 23, 2026 26-04436L

FIRST INSERTION

NOTICE OF FORECLOSURE SALE
IN THE CIRCUIT COURT OF THE TWENTIETH JUDICIAL CIRCUIT OF FLORIDA IN AND FOR LEE COUNTY
GENERAL JURISDICTION DIVISION
CASE NO. 25-CA-001910
APEX BANK,
Plaintiff, vs.
BRANDON GRAHAM, et al.,
Defendant.

NOTICE IS HEREBY GIVEN pursuant to a Summary Final Judgment of Foreclosure entered September 22, 2026 in Civil Case No. 25-CA-001910 of the Circuit Court of the TWENTIETH JUDICIAL CIRCUIT in and for Lee County, Ft. Myers, Florida, wherein APEX BANK is Plaintiff and Brandon Graham, et al., are Defendants, the Clerk of Court, Kevin C. Karnes, will sell to the highest and best bidder for cash at www.lee.realforeclose.com in accordance with Chapter 45, Florida Statutes on the 5 day of November, 2026 at 9:00 AM on the following described property as set forth in said Summary Final Judgment, to-wit:

Lot(s) 6 and 7, Block 4371, Cape Coral, Unit 63, according to the map or plat thereof, as recorded in Plat Book 21, Page(s) 48 through 81, inclusive, of the Public Records of Lee County, Florida.

Address: 841 SW 15th Ter, Cape Coral, FL 33991

Any person claiming an interest in the surplus from the sale, if any, other than the property owner as of the date of the lis pendens, must file a claim before the clerk reports the surplus as unclaimed.

Dated this day of 10/09/2026

Kevin C. Karnes
Deputy Clerk
CLERK OF THE CIRCUIT COURT
As Clerk of the Court
(SEAL) BY: N Wright-Angad

McCalla Raymer Leibert Pierce, LLP
110 SE 6th Street, Suite 2300
Fort Lauderdale, FL 33301
AccountsPayable@mccalla.com
Counsel of Plaintiff
24-10993FL
October 16, 23, 2026 26-04424L

FIRST INSERTION

NOTICE OF FORECLOSURE SALE
IN THE COUNTY COURT OF THE TWENTIETH JUDICIAL CIRCUIT IN AND FOR LEE COUNTY, FLORIDA
DIVISION: CIVIL
CASE NO. 26-CC-006213
PLANTATION BEACH CLUB III OWNERS' ASSOCIATION, INC., a Florida non-profit corporation,
Plaintiff, vs.
JOHN J. MARSHALL,
Defendant.

NOTICE is hereby given that the undersigned, Clerk of Circuit and County Courts of Lee County, Florida, will on November 19, 2026, at 9:00 A.M. via electronic sale at www.lee.realforeclose.com, in accordance with Section 45.031, Florida Statutes, offer for sale and sell to the highest bidder for cash, the following described property situated in Lee County, Florida:

Unit Week 43 in Condominium Parcel Letter B (a/k/a 1047) of PLANTATION BEACH CLUB III, PHASE I, a Condominium according to the Declaration of Condominium thereof, as recorded in Official Records Book 1422 at Page 2218, as amended in Official Records Book 1531, Page 1855, in the Public Records of Lee County, Florida and all additional amendments thereto, if any.

pursuant to the Final Judgment of Lien Foreclosure entered in a case pending in said Court in the above-styled cause.

Any person claiming an interest in the surplus from the sale, if any, other than the property owner as of the date of the Lis Pendens must file a claim in accordance with Florida Statutes, Section 45.031.

WITNESS my hand and official seal of said Court this day of 10/12/2026,

KEVIN C. KARNES,
CLERK OF COURT
(SEAL) By: N Wright-Angad
Deputy Clerk

Michael J. Belle, Esquire
Attorney for Plaintiff
service@michaelbelle.com
50860
October 16, 23, 2026 26-04435L

FIRST INSERTION

NOTICE OF RESCHEDULED SALE
IN THE CIRCUIT COURT OF THE TWENTIETH JUDICIAL CIRCUIT IN AND FOR LEE COUNTY, FLORIDA
CIVIL ACTION
CASE NO.: 2024-CA-006283
DATA MORTGAGE INC., DBA ESSEX MORTGAGE,
Plaintiff, vs.
BIANCA PORTIA LARI AKA BIANCA P. LARI AKA BIANCA LARI , et al,
Defendant(s).

NOTICE IS HEREBY GIVEN Pursuant to an Order Rescheduling Foreclosure Sale dated September 19, 2026, and entered in Case No. 2024-CA-006283 of the Circuit Court of the Twentieth Judicial Circuit in and for Lee County, Florida in which Data Mortgage Inc., dba Essex Mortgage, is the Plaintiff and Bianca Portia Lari aka Bianca P. Lari aka Bianca Lari, National Homebuyers Fund, Inc., Melissa Anne Lari aka Melissa A. Lari aka Melissa Lari, are defendants, the Lee County Clerk of the Circuit Court will sell to the highest and best bidder for cash in/on www.lee.realforeclose.com in accordance with chapter 45 Florida Statutes, Lee County, Florida at 9:00am on the 5th day of November, 2026, the following described property as set forth in said Final Judgment of Foreclosure:

LOT 4, BLOCK 46, UNIT 9, SECTION 14, TOWNSHIP 45 SOUTH, RANGE 27 EAST, A SUBDIVISION OF LEHIGH ACRES, ACCORDING TO THE PLAT THEREOF ON FILE IN THE OFFICE OF THE CLERK OF THE CIRCUIT COURT, RECORDED IN PLAT BOOK 15, PAGE 139, PUBLIC RECORDS OF LEE COUNTY, FLORIDA.

A/K/A 563 S FLAMINGO AVE, LEIGH ACRES, FL 33974

Any person claiming an interest in the surplus from the sale, if any, other than the property owner as of the date of the Lis Pendens must file a claim before the Clerk reports the surplus as unclaimed.

Dated in Lee County, Florida this day of 10/14/2026

Kevin C. Karnes
Clerk of the Circuit Court
Lee County, Florida
(SEAL) By: N Wright-Angad
Deputy Clerk

Albertelli Law
Attorney for Plaintiff
P.O. Box 23028
Tampa, FL 33623
(813) 221-4743
24-030073
October 16, 23, 2026 26-04478L

FIRST INSERTION

NOTICE OF SALE PURSUANT TO CHAPTER 45
IN THE CIRCUIT COURT OF THE TWENTIETH JUDICIAL CIRCUIT IN AND FOR LEE COUNTY, FLORIDA
CIVIL ACTION
CASE NO.: 2025-CA-004995
NATIONSTAR MORTGAGE LLC,
Plaintiff, vs.
SCOTT J. KRAEMER, et al,
Defendant(s).

NOTICE IS HEREBY GIVEN Pursuant to a Final Judgment of Foreclosure dated September 9, 2026, and entered in Case No. 2025-CA-004995 of the Circuit Court of the Twentieth Judicial Circuit in and for Lee County, Florida in which Nationstar Mortgage LLC, is the Plaintiff and Scott J. Kraemer; Nicole Kraemer; United States of America Acting through Secretary of Housing and Urban Development; Any And All Unknown Parties Claiming by, Through, Under, And Against The Herein named Individual Defendant(s) Who are not Known To Be Dead Or Alive, Whether Said Unknown Parties May Claim An Interest in Spouses, Heirs, Devisees, Grantees, Or Other Claimants are defendants, the Lee County Clerk of the Circuit Court will sell to the highest and best bidder for cash in/on www.lee.realforeclose.com in accordance with chapter 45 Florida Statutes, Lee County, Florida at 9:00am on the 5 day of November, 2026, the following described property as set forth in said Final Judgment of Foreclosure:

LOTS 13 AND 14, BLOCK 3067, CAPE CORAL, UNIT 62, ACCORDING TO THE MAP OR PLAT THEREOF AS RECORDED IN PLAT BOOK 21, PAGE 21 - 38, PUBLIC RECORDS OF LEE COUNTY, FLORIDA.

A/K/A 618 SW 22ND TERR CAPE CORAL FL 33991

Any person claiming an interest in the surplus from the sale, if any, other than the property owner as of the date of the Lis Pendens must file a claim before the Clerk reports the surplus as unclaimed.

Dated in Lee County, Florida this day of 10/12/2026,

Kevin C. Karnes
Clerk of the Circuit Court
Lee County, Florida
(SEAL) By: N Wright-Angad
Deputy Clerk

Albertelli Law
Attorney for Plaintiff
P.O. Box 23028
Tampa, FL 33623
(813) 221-4743
(813) 221-9171 facsimile
eService: servealaw@albertellilaw.com
IN - 25-006106
October 16, 23, 2026 26-04439L

FIRST INSERTION

NOTICE OF ACTION
IN THE CIRCUIT COURT OF THE TWENTIETH JUDICIAL CIRCUIT IN AND FOR LEE COUNTY, FLORIDA
CIVIL ACTION
Case No. 26-CA-004166
WALTER RAMIREZ and FEBE I. ARIAS RAMIREZ,
Plaintiffs, v.
OCEANS ROOFING ENTERPRISES, INC., a Florida corporation and JOSE HUGO MARTINEZ,
Defendants.

TO: OCEANS ROOFING ENTERPRISES, INC., a Florida corporation, by and through its Registered Agent and President, Lindsey J. Huelsenbeck, and all persons upon whom service of process would bind said corporation, whose current residence and whereabouts are unknown, and to all parties claiming an interest by, through, under, or against Oceans Roofing Enterprises, Inc.:

YOU ARE NOTIFIED that an action to foreclose a mortgage on the following described real property located in Lee County, Florida:

A tract or parcel of land lying in the West Half (W 1/2) of the Southwest Quarter (SW 1/4) of the Northeast Quarter (NE 1/4) of the Southeast Quarter (SE 1/4) of Section 6, Township 44 South, Range 26 East, Lee County, Florida which tract or parcel is described as follows:

From the Northwest corner of said fraction run North 89 degrees 23' 15" East along the North line of said fraction and the North line of parcel described in Deed recorded in Book 788 at Page 356 of the Public Records of Lee County, for 100 feet to the Northeast corner of said parcel and the Point of Beginning of the herein described parcel. From said Point of Beginning run South 01 degrees 01' 40" East parallel with the West line of said fraction, along the East line of said parcel described in O.R. Book 788 at Page 356 and a Southerly prolongation thereof, along the West line of a 50 foot roadway and utility easement for 319.28 feet; thence run South 30 degrees 53' 40" East along the Southwesterly line of said 50 foot roadway easement for 111.85 feet to an intersection with a Westerly prolongation of the North line of the parcel described in O.R. Book 292 at Page 890; thence run North 89 degrees 22' 20" East along said Westerly prolongation for 43.50 feet to the Northwest corner of said parcel; thence continue North 89 degrees 22' 20" East along said North line for 128 feet to the Northeast corner of said parcel; thence run North 01 degrees 00' 00" West along the East line of said West Half (W 1/2) of the Southwest Quarter (SW 1/4) of the Northeast Quarter (NE 1/4) of the Southeast Quarter (SE 1/4) of Section 6 for 415.83 feet to the Northeast corner of said fraction; thence run South 89 degrees 23' 15" West along the North line of said fraction for 227.40 feet to the Point of Beginning Together with an easement for ingress and egress and utilities described in Deed recorded in O.R. Book 788 at Page 356, Lee County, Records.

has been filed against you, and you are required to serve a copy of your written defenses, if any, to it on Plaintiffs' attorneys, Boatman Ricci, Melissa B. Boatman, Esq., 3021 Airport-Pulling Rd. N., Suite 202, Naples, Florida 34105, and file the original with the Clerk of this Court within thirty (30) days after the first publication of this Notice, either before service on Plaintiffs' attorneys or immediately thereafter; otherwise a default will be entered against you for the relief demanded in the Complaint.

The nature of this proceeding is an action by Plaintiffs, Walter Ramirez and Febe I. Arias Ramirez, to foreclose a mortgage dated June 11, 2020, and recorded on June 15, 2020, at Official Records Instrument No. 2020000134818, of the Official Records of Lee County, Florida, encumbering the above-described real property.

This action was instituted in the Circuit Court of the Twentieth Judicial Circuit in and for Lee County, Florida, and is styled Ramirez v. Oceans Roofing Enterprises, Inc., Case No. 26-CA-004166.

DATED this 8th day of October, 2026.

Kevin C. Karnes
CLERK OF THE CIRCUIT COURT
(SEAL) By: K Shoap
As Deputy Clerk

BOATMAN RICCI
s/ Melissa B. Boatman, Esq.
Fla. Bar No. 1075283
3021 Airport-Pulling Rd. N., Suite 202
Naples, Florida 34105
CourtFilings@boatmanricci.com
(239) 330-1494 — Telephone
Attorneys for Plaintiffs
October 16, 23, 2026 26-04399L

FIRST INSERTION

NOTICE OF FORECLOSURE SALE #20286
IN THE CIRCUIT COURT OF THE TWENTIETH JUDICIAL CIRCUIT, IN AND FOR LEE COUNTY, FLORIDA.
CASE No. 25-CA-003859
FTF LENDING LLC,
PLAINTIFF, VS.
REINALDO LAFFITA, ET AL.
DEFENDANT(S).

NOTICE IS HEREBY GIVEN pursuant to the Final Judgment of Foreclosure dated September 24, 2026, in the above action, I will sell to the highest bidder for cash at Lee County, Florida, on November 19, 2026 , at 09:00 AM, at www.lee.realforeclose.com for the following described property:

LOTS 11 AND 12, BLOCK 1375, UNIT 18, OF CAPE CORAL SUBDIVISION, ACCORDING TO THE PLAT THEREOF, AS RECORDED IN PLAT BOOK 13, AT PAGES 96 THROUGH 120, INCLUSIVE, OF THE PUBLIC RECORDS OF LEE COUNTY, FLORIDA.

Any person claiming an interest in the surplus from the sale, if any, other than the property owner as of the date of the lis pendens must file a claim before the clerk reports the surplus as unclaimed. The Court, in its discretion, may enlarge the time of the sale. Notice of the changed time of sale shall be published as provided herein.

Date: 10/12/2026

Kevin C. Karnes
Clerk of the Circuit Court
(SEAL) By: N Wright-Angad
Deputy Clerk of the Court

Prepared by:
Tromberg, Miller, Morris & Partners, PLLC
600 West Hillsboro Boulevard
Suite 600
Deerfield Beach, FL 33441
Our Case #:
24FL324-0008/25-CA-003859/FCI
October 16, 23, 2026 26-04451L

FIRST INSERTION

NOTICE OF UNCLAIMED GUARDIANSHIP FUNDS DEPOSITED IN COURT REGISTRY
IN THE CIRCUIT COURT OF THE TWENTIETH JUDICIAL CIRCUIT IN AND FOR LEE COUNTY FLORIDA, GUARDIANSHIP ACTION
25-GA-000125
IN RE: The Guardianship of Oria Wright, III

Notice is given that, pursuant to section 744.534, Florida Statutes, unclaimed guardianship funds from the following case remain on deposit in the registry of court:

Guardianship of: IN RE: The Guardianship of Oria Wright, III, Person Subject to Guardianship

Case number 25-GA-000125, $636.06 (less the cost of publication); Patrick C. Weber, as Guardian, deposited these funds per order entered on 10/07/2026, on behalf of Oria Wright, III.

The Clerk of the Circuit Court shall deposit these funds with the State Treasurer no less than six months after the posting or the first publication of this notice, after deducting fees and any costs of publication. Within 10 years from the date of such deposit with the State Treasurer, any person, firm, corporation, or other legal entity entitled to such funds may obtain same by order of court and compliance with other applicable provisions of section 744.534, Florida Statutes. All funds deposited with the State Treasurer not claimed within 10 years from the date of deposit shall escheat to the State for the benefit of the State School Fund.

Dated: October 13, 2026

KEVIN C. KARNES, CLERK OF CIRCUIT COURT,
Lee County
1700 Monroe St.
Ft. Myers, FL 33901
By: s/ Christine Strufe
Deputy Clerk

Oct. 16; Nov. 13, 2026 26-04479L

Q&A

LV18237_V13

Who benefits from legal notices?

You do. Legal notices are required because a government body or corporation wants to take action that can affect individuals and the public at large.

When the government is about to change your life, or your property or assets are about to be taken, public notices in newspapers serve to alert those affected.

--- ACTIONS / SALES ---

FIRST INSERTION

NOTICE OF ACTION
IN THE CIRCUIT COURT OF THE TWENTIETH JUDICIAL CIRCUIT IN AND FOR LEE COUNTY, FLORIDA
CASE NO.: 26-CA-005129
CROSSCOUNTRY MORTGAGE, LLC,
Plaintiff, VS.
PEDRO CASANOVA GOMEZ; GEORGINA HERNANDEZ SAMPER; et al.,
Defendant(s).
TO: Pedro Casanova Gomez
Last Known Residence: 2715 NW 7th St Cape Coral, FL 33993

YOU ARE NOTIFIED that an action to foreclose a mortgage on the following property in LEE County, Florida:

LOTS 44 & 45, BLOCK 4020, UNIT 55 CAPE CORAL, ACCORDING TO THE MAP OR PLAT THEREOF ON, RECORDED IN PLAT BOOK 19, PAGE(S) 92 THROUGH 106, OF THE PUBLIC RECORDS OF LEE COUNTY, FLORIDA

has been filed against you and you are required to serve a copy of your written defenses, if any, to it on ALDRIDGE PITE, LLP, Plaintiff's attorney, at 401 W. Linton Blvd. Suite 202-B Delray Beach, FL 33444, on or before within 30 days of publication, and file the original with the clerk of this court either before service on Plaintiff's attorney or immediately thereafter; otherwise a default will be entered against you for the relief demanded in the complaint or petition.

Dated on October 12, 2026

Kevin C. Karnes
As Clerk of the Court
(SEAL) By: K Shoap
As Deputy Clerk

ALDRIDGE PITE, LLP,
Plaintiff's attorney,
401 W. Linton Blvd. Suite 202-B
Delray Beach, FL 33444
1190-894B
Ref# 26545
October 16, 23, 2026 26-04449L

FIRST INSERTION

NOTICE OF ACTION BY PUBLICATION
IN THE COUNTY COURT OF THE TWENTIETH JUDICIAL CIRCUIT IN AND FOR LEE COUNTY, FLORIDA
DIVISION: CIVIL
CASE NO. 26-CC-006489
PLANTATION BEACH CLUB I OWNERS' ASSOCIATION, INC., a Florida non-profit corporation,
Plaintiff, vs.
ELEANOR BENKNER, AND THE UNKNOWN HEIRS, DEVISEES, GRANTEES, ASSIGNEES, LIENORS, CREDITORS, TRUSTEES, OR OTHER CLAIMANTS CLAIMING BY, THROUGH, UNDER OR AGAINST ELEANOR BENKNER,
Defendant
TO: ELEANOR BENKNER AND THE UNKNOWN HEIRS, DEVISEES, GRANTEES, ASSIGNEES, LIENORS, CREDITORS, TRUSTEES, OR OTHER CLAIMANTS CLAIMING BY, THROUGH, UNDER OR AGAINST ELEANOR BENKNER
LAST KNOWN ADDRESS: 85 NORWOOD AVE., NORTHPORT, NY 11768

YOU ARE HEREBY notified that an action to foreclose a Claim of Lien upon the following described real property located in Lee County, Florida:

Unit Week 17 in Condominium Parcel 1007 (F/K/A 7), of PLANTATION BEACH CLUB I, PHASE A, a Condominium according to the Declaration of Condominium thereof, as recorded in Official Records Book 1413 at Page 264 in the Public Records of Lee County Florida and all amendments thereto, if any. Amended in Official Records Book 1513 at Page 1925, Public records of Lee County, Florida

has been filed against you and you are required to serve a copy of your written defenses, if any, upon Michael J. Belle, Esq., of Michael J. Belle, P.A., Attorney for Plaintiff, whose address is 2364 Fruitville Road, Sarasota, Florida 34237, within 30 days from the first date of publication, and file the original with the Clerk of this Court either before service on Plaintiff's attorney or immediately thereafter; otherwise, a default will be entered against you for the relief demanded in the Plaintiff's Complaint.

WITNESS my hand and seal of this Court on this 12th day of October, 2026.

KEVIN C. KARNES,
CLERK OF COURTS
(SEAL) By: K Shoap
As Deputy Clerk

Michael J. Belle, Esq.,
Michael J. Belle, P.A.,
Attorney for Plaintiff,
2364 Fruitville Road,
Sarasota, Florida 34237
service@michaelbelle.com
October 16, 23, 2026 26-04460L

FIRST INSERTION

NOTICE OF FORECLOSURE SALE
IN THE CIRCUIT COURT OF THE TWENTIETH JUDICIAL CIRCUIT OF FLORIDA IN AND FOR LEE COUNTY
GENERAL JURISDICTION DIVISION
CASE NO. 26-CA-001630
PLANET HOME LENDING, LLC,
Plaintiff, vs.
BRANDON JON-DAVID MACIAS, et al.,
Defendant.

NOTICE IS HEREBY GIVEN pursuant to a Summary Final Judgment of Foreclosure entered September 18, 2026 in Civil Case No. 26-CA-001630 of the Circuit Court of the TWENTIETH JUDICIAL CIRCUIT in and for Lee County, Ft. Myers, Florida, wherein PLANET HOME LENDING, LLC is Plaintiff and Brandon Jon-David Macias, et al., are Defendants, the Clerk of Court, Kevin C. Karnes, will sell to the highest and best bidder for cash at www.lee.realforeclose.com in accordance with Chapter 45, Florida Statutes on the 5 day of November, 2026 at 9:00 AM on the following described property as set forth in said Summary Final Judgment, to-wit:

Lot 53 and 54, Block 3059, Cape Coral Unit 62, according to the Plat thereof, recorded in Plat Book 21, Page(s) 21, of the Public Records of Lee County, Florida.
Address: 1819 SW 6Th Avenue, Cape Coral, FL 33991

Any person claiming an interest in the surplus from the sale, if any, other than the property owner as of the date of the lis pendens, must file a claim before the clerk reports the surplus as unclaimed.

Dated this day of 10/12/2026,

Kevin C. Karnes
Deputy Clerk
CLERK OF THE CIRCUIT COURT
As Clerk of the Court
(SEAL) BY: N Wright-Angad

McCalla Raymer Leibert Pierce, LLP
110 SE 6th Street, Suite 2300
Fort Lauderdale, FL 33301
AccountsPayable@mccalla.com
Counsel of Plaintiff
25-15597FL
October 16, 23, 2026 26-04440L

FIRST INSERTION

NOTICE OF ACTION
Constructive Service of Process
IN THE CIRCUIT COURT OF THE TWENTIETH JUDICIAL CIRCUIT, IN AND FOR LEE COUNTY, FLORIDA
Case No. 26-CA-003812
Honorable Judge: KYLE, KEITH R
PLANET HOME LENDING, LLC
Plaintiff, vs.
SEAN CYRIL FOWLER; UNKNOWN SPOUSE OF SEAN CYRIL FOWLER; TOWN HALL AMENITIES CENTER ASSOCIATION, INC.; RIVER HALL COUNTRY CLUB HOMEOWNERS ASSOCIATION, INC.; UNKNOWN TENANT OCCUPANT #1; UNKNOWN TENANT OCCUPANT #2
Defendants,
TO: SEAN CYRIL FOWLER and UNKNOWN SPOUSE OF SEAN CYRIL FOWLER
Last Known Address: 3160 WESTON MANOR DRIVE, ALVA, FL 33920.

YOU ARE NOTIFIED that an action to Foreclose a Mortgage on the following property, commonly known as 3160 WESTON MANOR DRIVE, ALVA, FL 33920, and more particularly described as follows:

LOT 71, IN BLOCK J, OF RIVER HALL COUNTRY CLUB, PHASE TWO, ACCORDING TO THE PLAT THEREOF, AS RECORDED IN INSTRUMENT NUMBER 2006000409514, OF THE PUBLIC RECORDS OF LEE COUNTY, FLORIDA.
PARCEL ID: 25-43-26-03-0000J.0710

has been filed against you and you are required to serve a copy of your written defenses, if any, to it on Matthew T. Wasinger, Esquire, the Plaintiff's attorney, whose address is 605 E. Robinson Street, Suite 730, Orlando, FL 32801 within 30 days from the first proof of publication of this Notice, and file the original with the clerk of this court either before service on the plaintiff's attorney or immediately thereafter; otherwise a default will be entered against you for the relief demanded in the complaint or petition.

DATED ON: October 12, 2026

Kevin C. Karnes
Lee County Clerk of Court
and Comptroller
(SEAL) K Shoap
As Deputy Clerk

Matthew T. Wasinger, Esquire,
the Plaintiff's attorney,
605 E. Robinson Street, Suite 730,
Orlando, FL 32801
October 16, 23, 2026 26-04453L

FIRST INSERTION

NOTICE OF ACTION
IN THE CIRCUIT COURT OF THE TWENTIETH JUDICIAL CIRCUIT IN AND FOR LEE COUNTY, FLORIDA
Case No.: 26-CA-003854
KIRK ERICKSON, individually
Plaintiff, vs.
ALLEN C. SCROGGINS, as Successor Trustee of THE RICHARD L. DEGEORGE REVOCABLE TRUST DATED NOVEMBER 14TH, 2013
Defendant.
and
KYNDRA MARSH, individually and THOMAS BELLA, as Second Successor Trustee.
Nominal Defendants
TO: ALLEN C. SCROGGINS, as Successor Trustee of THE RICHARD L. DEGEORGE REVOCABLE TRUST DATED NOVEMBER 14TH, 2013 at his last known address:
105 Wheeler Street
Tahlequah, OK 74464

YOU ARE NOTIFIED that a Complaint has been filed against you and that you are required to serve a copy of your written defenses, if any to it on Erika Prichard, Esq., from the law firm of BURANDT, ADAMSKI, FEICHTHALER & SANCHEZ, PLLC attorney for KIRK ERICKSON, individually whose address is 1714 Cape Coral Parkway East, Cape Coral, FL 33904, and file the original with the clerk of the above styled court on or before November 16, 2026 otherwise a default will be entered against you for the relief prayed for in the Complaint.

This notice shall be published once a week for four consecutive weeks in the Lee County Business Observer.

WITNESS my hand and the seal of said court at Lee County, Florida on this 7th day of October, 2026.

Kevin C. Karnes
As Clerk of the Court
(SEAL) By: K Shoap
As Deputy Clerk

BURANDT, ADAMSKI,
FEICHTHALER & SANCHEZ, PLLC
attorney for KIRK ERICKSON,
1714 Cape Coral Parkway East,
Cape Coral, FL 33904
Oct. 16, 23, 30; Nov. 6, 2026
26-04390L

FIRST INSERTION

NOTICE OF ACTION
IN THE CIRCUIT COURT OF THE TWENTIETH JUDICIAL CIRCUIT IN AND FOR LEE COUNTY, FLORIDA - CIVIL ACTION
Case No. 26CA2518
THE PLACE MASTER ASSOCIATION, INC., a Florida not for profit corporation,
Plaintiff, v.
BRAD ACKERMAN A/K/A BRADLEY ACKERMAN, ET AL.
Defendants.
TO: KAYLA RENEE ACKERMAN
Last Known Address: 919 CEDAR STREET, UNIT B, CEDAR GROVE, CA 93950

YOU ARE NOTIFIED that an action has been filed against you for foreclosure of Plaintiff's lien for such unpaid amounts due to the above-named Plaintiff for the following premises located in Lee County, Florida:

Lot 100, in Block A, of PLACE AT CORKSCREW - PHASE 1-C, according to the plat thereof, as recorded in Instrument Number 2017000179410, of the Public Records of Lee County, Florida. Parcel ID #24-46-26-L1-0300A.1000
Property Address: 17410 ELKGROVE LANE, ESTERO, FL 33928

You are required to serve a copy of your written defenses, if any, to this action on the Plaintiff's attorney, Kristie P. Mace, Esq., Goede, DeBoest & Cross, PLLC, 2030 McGregor Boulevard, Ft. Myers, FL 33901, within thirty (30) days after the first date of publication of this Notice, and file the original with the Clerk of this Court either before service on the Plaintiff's attorney or immediately thereafter; otherwise, a default will be entered against you for the relief demanded in the complaint or petition.

DATED on this 13th day of October, 2026.

Kevin C. Karnes, Clerk of the Court
(SEAL) By K Shoap
As Deputy Clerk

Kristie P. Mace, Esq.,
Goede, DeBoest & Cross, PLLC,
2030 McGregor Boulevard,
Ft. Myers, FL 33901,
kmace@gadclaw.com and
kgermanis@gadclaw.com
October 16, 23, 2026 26-04477L

FIRST INSERTION

NOTICE OF ACTION BY PUBLICATION
IN THE COUNTY COURT OF THE TWENTIETH JUDICIAL CIRCUIT IN AND FOR LEE COUNTY, FLORIDA
DIVISION: CIVIL
CASE NO. 26-CC-006318
CASA YBEL BEACH AND RACQUET CLUB CONDOMINIUM ASSOCIATION, INC., a Florida non-profit corporation,
Plaintiff, vs.
JAMES E. WEEKS AND RAGAN C. WEEKS,
Defendant(s).
TO: JAMES E. WEEKS AND RAGAN C. WEEKS
Last Known Address: 556 PINE VALLEY RD SE, MARIETTA, GA 30067-4828

YOU ARE HEREBY notified that an action to foreclose a Claim of Lien upon the following described real property located in Lee County, Florida:

Unit Week No. 19, in Condominium Parcel No. 214, of CASA YBEL BEACH AND RACQUET CLUB, PHASE G, a condominium, together with an undivided interest in the common elements appurtenant thereto, according to the Declaration of Condominium thereof recorded in Official Records Book 1478, Page 2171, in the Public Records of Lee County, Florida.

has been filed against you and you are required to serve a copy of your written defenses, if any, upon Michael J. Belle, Esq., of Michael J. Belle, P.A., Attorney for Plaintiff, whose address is 2364 Fruitville Road, Sarasota, Florida 34237, within 30 days from the first date of publication, and file the original with the Clerk of this Court either before service on Plaintiff's attorney or immediately thereafter; otherwise, a default will be entered against you for the relief demanded in the Plaintiff's Complaint.

WITNESS my hand and seal of this Court on this 8th day of October, 2026.

KEVIN C. KARNES,
CLERK OF COURTS
(SEAL) By: K Shoap
Deputy Clerk

Michael J. Belle, Esq.,
Michael J. Belle, P.A.,
Attorney for Plaintiff,
2364 Fruitville Road,
Sarasota, Florida 34237
service@michaelbelle.com
October 16, 23, 2026 26-04398L

FIRST INSERTION

NOTICE OF ACTION
IN THE CIRCUIT COURT OF THE TWENTIETH JUDICIAL CIRCUIT IN AND FOR LEE COUNTY, FLORIDA
CASE NO.: 26-CA-000649
CROSSCOUNTRY MORTGAGE, LLC,
Plaintiff, VS.
CRISTIAN LOPEZ RAFAEL; MEGAN NICOLE LOWMAN A/K/A MEGAN LOWMAN A/K/A MEGAN N. LOWMAN; et al.,
Defendant(s).
TO: Megan Nicole Lowman a/k/a Megan Lowman a/k/a Megan N. Lowman
Last Known Residence: 10920 Shirley Ln North Fort Myers, FL 33917

YOU ARE NOTIFIED that an action to foreclose a mortgage on the following property in LEE County, Florida:

LOT 2, BLOCK 50, UNIT 5, SECTION 13, TOWNSHIP 44 SOUTH, RANGE 26 EAST, LEHIGH ACRES, ACCORDING TO THE MAP OR PLAT THEREOF, RECORDED IN PLAT BOOK 15, PAGE 62, OF THE PUBLIC RECORDS OF LEE COUNTY, FLORIDA.

has been filed against you and you are required to serve a copy of your written defenses, if any, to it on ALDRIDGE PITE, LLP, Plaintiff's attorney, at 401 W. Linton Blvd. Suite 202-B Delray Beach, FL 33444, on or before within 30 days of publication, and file the original with the clerk of this court either before service on Plaintiff's attorney or immediately thereafter; otherwise a default will be entered against you for the relief demanded in the complaint or petition.

Dated on October 12, 2026

Kevin C. Karnes
As Clerk of the Court
(SEAL) By: K Shoap
As Deputy Clerk

ALDRIDGE PITE, LLP,
Plaintiff's attorney,
401 W. Linton Blvd. Suite 202-B
Delray Beach, FL 33444
1190-015B
Ref# 26608
October 16, 23, 2026 26-04459L

FIRST INSERTION

NOTICE OF ACTION
IN THE CIRCUIT COURT OF THE TWENTIETH JUDICIAL CIRCUIT, IN AND FOR LEE COUNTY, FLORIDA.
CASE No. 26-CA-003888
ROCKET MORTGAGE, LLC,
PLAINTIFF, VS.
ELISITO ALMAGUER LAGUNA, ET AL.
DEFENDANT(S).
To: Elisito Almaguer Laguna
RESIDENCE: UNKNOWN
LAST KNOWN ADDRESS: 819 NE 17th Ter, Cape Coral, FL 33909
To: Unknown Spouse of Elisito Almaguer Laguna
RESIDENCE: UNKNOWN
LAST KNOWN ADDRESS: 819 NE 17th TER, Cape Coral, FL 33909

YOU ARE HEREBY NOTIFIED that an action to foreclose a mortgage on the following described property located in Lee County, Florida:

LOTS 41 AND 42, BLOCK 2107, CAPE CORAL UNIT 32, ACCORDING TO THE PLAT THEREOF, AS RECORDED IN PLAT BOOK 16, PAGE(S) 2, OF THE PUBLIC RECORDS OF LEE COUNTY, FLORIDA.

has been filed against you, and you are required to serve a copy of your written defenses, if any, to this action, on Tromberg, Miller, Morris & Partners, PLLC, attorneys for Plaintiff, whose address is 600 West Hillsboro Boulevard, Suite 600, Deerfield Beach, FL 33441, and file the original with the Clerk of the Court, within 30 days after the first publication of this notice, immediately thereafter, otherwise a default may be entered against you for the relief demanded in the Complaint.

This notice shall be published once a week for two consecutive weeks in the Business Observer.

If you are a person with a disability who needs any accommodation in order to participate in this proceeding, you are entitled, at no cost to you, to the provision of certain assistance. Please contact Brooke Dean, Operations Division Manager, whose office is located at Lee County Justice Center, 1700 Monroe Street, Fort Myers, Florida 33901, and whose telephone number is (239) 533-1771, at least 7 days before your scheduled court appearance, or immediately upon receiving this notification if the time before the scheduled appearance is less than 7 days; if you are hearing or voice impaired, call 711.

Date: 10/12/2026

Kevin C. Karnes
Clerk of the Circuit Court
(SEAL) By: K Shoap
Deputy Clerk of the Court

Tromberg, Miller, Morris & Partners, PLLC,
attorneys for Plaintiff,
600 West Hillsboro Boulevard,
Suite 600,
Deerfield Beach, FL 33441
Our Case #:
26FL935-0020/26-CA-003888/Rocket
October 16, 23, 2026 26-04448L

FIRST INSERTION

NOTICE OF ACTION
IN THE CIRCUIT COURT OF THE TWENTIETH JUDICIAL CIRCUIT OF FLORIDA IN AND FOR LEE COUNTY
GENERAL JURISDICTION DIVISION
CASE NO. 26-CA-002830
LAKEVIEW LOAN SERVICING, LLC,
Plaintiff, vs.
ORISBEL GUTIERREZ PENA A/K/A ORISBEL LUIS GUTIERREZ PENA, et al.,
Defendant.
To: ORISBEL GUTIERREZ PENA A/K/A ORISBEL LUIS GUTIERREZ PENA
3100 62ND ST W, LEHIGH ACRES, FL 33971
UNKNOWN SPOUSE OF ORISBEL GUTIERREZ PENA A/K/A ORISBEL LUIS GUTIERREZ PENA
3100 62ND ST W LEHIGH ACRES, FL 33971
YARISBEL ZAYAS ALARCON
3100 62ND ST W LEHIGH ACRES, FL 33971
LEHIGH INVESTMENT GROUP, LLC
5220 SUMMERLIN COMMONS BLVD, SUITE 500, FORT MYERS, FL 33907
LAST KNOWN ADDRESS STATED, CURRENT RESIDENCE UNKNOWN

YOU ARE HEREBY NOTIFIED that an action to foreclose Mortgage covering the following real and personal property described as follows, to-wit:

LOT 11, BLOCK 118, UNIT 12, SECTION 2, TOWNSHIP 44 SOUTH, RANGE 26 EAST, LEHIGH ACRES, ACCORDING TO PLAT THEREOF AS RECORDED IN PLAT BOOK 15, PAGE 59, OF THE PUBLIC RECORDS OF LEE COUNTY, FLORIDA.
Property address: 3100 62ND ST W LEHIGH ACRES, FL 33971

has been filed against you and you are required to file a copy of your written defenses, if any, to it on Cassandra Jeffries, Esq., McCalla Raymer Leibert Pierce, LLP, 225 East Robinson Street, Suite 155, Orlando, FL 32801 and file the original with the Clerk of the above-styled Court within 30 days from the first publication, otherwise a Judgment may be entered against you for the relief demanded in the Complaint.

WITNESS my hand and seal of said Court on the 8th day of October, 2026.

Kevin C. Karnes
CLERK OF THE CIRCUIT COURT
As Clerk of the Court
(SEAL) BY: K Shoap
Deputy Clerk

MCCALLA RAYMER LEIBERT PIERCE, LLP
225 East Robinson Street, Suite 155,
Orlando, FL 32801
Phone: (407) 674-1850
Fax: (321) 248-0420
Email:
AccountsPayable@mccalla.com;
Cassandra.jeffries@mccalla.com
26-20004FL
October 16, 23, 2026 26-04402L

FIRST INSERTION

NOTICE OF ACTION
IN THE CIRCUIT COURT OF THE TWENTIETH JUDICIAL CIRCUIT OF FLORIDA IN AND FOR LEE COUNTY
GENERAL JURISDICTION DIVISION
CASE NO. 2026-CA-004023
WILMINGTON SAVINGS FUND SOCIETY, FSB, NOT IN ITS INDIVIDUAL CAPACITY, BUT SOLELY AS TRUSTEE FOR RESIDENTIAL MORTGAGE AGGREGATION TRUST,
Plaintiff, vs.
HEYDER INVESTMENT LLC: JUSTIN HEYDER SOLER a/k/a JUSTIN SOLER: ARMANDO SOLER RODRIGUEZ a/k/a ARMANDO SOLER; SOPHIA CONSTRUCTION AND DISTRIBUTOR CORP.; OSCAR ESPANA; CITY OF CAPE CORAL, a Municipal Corporation of the State of Florida; UNKNOWN TENANT IN POSSESSION 1; and UNKNOWN TENANT IN POSSESSION 2,
Defendants.
To: ARMANDO SOLER RODRIGUEZ a/k/a ARMANDO SOLER
1027 NW 40th Place
Cape Coral, Florida 33993
SOPHIA CONSTRUCTION AND DISTRIBUTOR CORP.
c/o Oscar Espana, as Registered Agent
4839 Tudor Drive, Apt. 2
Cape Coral, Florida 33904
OSCAR ESPANA
4839 Tudor Drive, Apt. 2
Cape Coral, Florida 33904
LAST KNOWN ADDRESS STATED, CURRENT RESIDENCE UNKNOWN

YOU ARE HEREBY NOTIFIED that an action to foreclose Mortgage covering the following real and personal property described as follows, to-wit:

LOTS 17 AND 18, BLOCK 4243, CAPE CORAL UNIT 60, ACCORDING TO THE MAP OR PLAT THEREOF, AS RECORDED IN PLAT BOOK 19, PAGES 154 THROUGH 169 INCLUSIVE, OF THE PUBLIC RECORDS OF LEE COUNTY, FLORIDA.

has been filed against you and you are required to a copy of your written defenses, if any, to it on Charles P. Gufford, McCalla Raymer Leibert Pierce, LLP, 225 E. Robinson St. Suite 155, Orlando, FL 32801 and file the original with the Clerk of the above-styled Court within 30 days from the first publication, otherwise a Judgment may be entered against you for the relief demanded in the Complaint.

WITNESS my hand and seal of said Court on the 8th day of October, 2026.

Kevin C. Karnes
CLERK OF THE CIRCUIT COURT
As Clerk of the Court
(SEAL) BY: K Shoap
Deputy Clerk

MCCALLA RAYMER LEIBERT PIERCE, LLP
225 E. Robinson St. Suite 155
Orlando, FL 32801
Phone: (407) 674-1850
Email: charles.gufford@mccalla.com
Email: todd.latoski@mccalla.com
25-13377FL
October 16, 23, 2026 26-04401L

--- ACTIONS / SALES ---

FIRST INSERTION

NOTICE OF ACTION AGAINST DEFENDANT UNKNOWN TENANT 1 AND UNKNOWN TENANT 2
IN THE CIRCUIT COURT OF THE TWENTIETH JUDICIAL CIRCUIT, IN AND FOR LEE COUNTY, FLORIDA
Case No.: 26-CA-003972
Division: Civil
Judge James R. Shenko
Planet Home Lending, LLC
Plaintiff, vs.
Lazara I Puerto Reyes, et al.
Defendants.
To: UNKNOWN TENANT 1
1140 NAVAJO AVENUE
LEHIGH ACRES, FL 33936
UNITED STATES OF AMERICA
UNKNOWN TENANT 2
1140 NAVAJO AVENUE
LEHIGH ACRES, FL 33936
UNITED STATES OF AMERICA
and all parties claiming interest by, through, under or against Defendant(s) UNKNOWN TENANT 1 AND UNKNOWN TENANT 2, and all parties having or claiming to have any right, title or interest in the property herein described;

YOU ARE NOTIFIED that an action to foreclose a mortgage on the following described property in Lee County, Florida:

All that certain land situate in Lee County, Florida to-wit:
Lot 15, Block 5, ADDITION ONE TO LEHIGH ACRES, Section 5 and 6, Township 45 South, Range 27 East, according to the Map or Plat thereof, as recorded in Plat Book 12, Page 137 through 139, inclusive, Public Records of Lee County, Florida.

has been filed against you; and you are required to serve a copy of your written defenses, if any, to it on MAXINE MELTZER, Plaintiff's attorney, P. O. Box 165028, Columbus, OH 43216-5028, within thirty (30) days after the first publication of this Notice and file the original with the Clerk of this Court either before service on Plaintiff's attorney or immediately thereafter; otherwise a default will be entered against you for the relief demanded in the Complaint.

If you are a person with a disability who needs any accommodation in order to participate in this proceeding, you are entitled, at no cost to you, to the provision of certain assistance. Please contact Brooke Dean, Operations Division Manager, whose office is located at Lee County Justice Center, 1700 Monroe Street, Fort Myers, Florida 33901, and whose telephone number is (239) 533-1771, at least 7 days before your scheduled court appearance, or immediately upon receiving this notification if the time before the scheduled appearance is less than 7 days; if you are hearing or voice impaired, call 711.

WITNESS my hand and seal of this Court on the 13th day of October, 2026.

KEVIN C. KARNES
CLERK OF THE CIRCUIT COURT
LEE COUNTY, FLORIDA
(SEAL) By: K Shoap
Deputy Clerk

THE MANLEY LAW FIRM LLC
26-004335_AJM1
October 16, 23, 2026 26-04463L

FIRST INSERTION

NOTICE AND ORDER TO SHOW CAUSE
IN THE CIRCUIT COURT OF THE TWENTIETH JUDICIAL CIRCUIT OF FLORIDA, IN AND FOR LEE COUNTY FLORIDA
GENERAL CIVIL DIVISION
CASE NO: 2026-CA-005032
7 ISLANDS COMMUNITY DEVELOPMENT DISTRICT, a local unit of special-purpose government organized and existing under the laws of the State of Florida,
Plaintiff, v.
THE STATE OF FLORIDA, AND THE TAXPAYERS, PROPERTY OWNERS AND CITIZENS OF THE 7 ISLANDS COMMUNITY DEVELOPMENT DISTRICT, INCLUDING NON-RESIDENTS OWNING PROPERTY OR SUBJECT TO TAXATION THEREIN, AND OTHERS HAVING OR CLAIMING ANY RIGHTS, TITLE OR INTEREST IN PROPERTY TO BE AFFECTED BY THE ISSUANCE OF THE BONDS AND LEVY OF ASSESSMENTS HEREIN DESCRIBED, OR TO BE AFFECTED IN ANY WAY THEREBY,
Defendants.

TO THE STATE OF FLORIDA, AND THE TAXPAYERS, PROPERTY OWNERS AND CITIZENS OF 7 ISLANDS COMMUNITY DEVELOPMENT DISTRICT, INCLUDING NONRESIDENTS OWNING PROPERTY OR SUBJECT TO TAXATION THEREIN, AND OTHERS HAVING OR CLAIMING ANY RIGHT, TITLE OR INTEREST IN PROPERTY TO BE AFFECTED BY THE ISSUANCE OF 7 ISLANDS COMMUNITY DEVELOPMENT DISTRICT SPECIAL ASSESSMENT BONDS AND LEVY OF SPECIAL ASSESSMENTS, OR TO BE AFFECTED IN ANY WAY THEREBY:

7 Islands Community Development District (the "District") having filed its Complaint for validation of not to exceed $217,610,000 7 Islands Community Development District Special Assessment Bonds, in one or more series (the "Bonds") and the special assessments levied securing such Bonds pursuant to Chapters 170, 190, and 197, Florida Statutes (the "Special Assessments"), and it appearing in and from said Complaint and the Exhibits attached thereto that the District has adopted a resolution authorizing the issuance of the Bonds for the purpose of providing funds, together with other available funds, for paying the costs of planning, financing, acquiring, constructing, reconstructing, equipping and installing improvements as part of its Project (as defined in said Complaint), and it also appearing that all of the facts required to be stated by said Complaint and the Exhibits by Chapter 75, Florida Statutes, are contained therein, and that the District prays that this Court issue an order as directed by said Chapter 75, and the Court being fully advised in the premises:

NOW, THEREFORE,

IT IS ORDERED that all taxpayers, property owners and citizens of the District, including non-residents owning property or subject to taxation, and others having or claiming any rights, title or interest in property to be affected by the issuance of the Bonds and levy of Special Assessments, or to be affected in any way thereby, and the State of Florida, through the State Attorney of the Twentieth Judicial Circuit, in and for Lee County, Florida, appear on **November 23, 2026 at 11:00 a.m.**, before the **Honorable Alane C. Laboda** in Courtroom 4-O of the Lee County Justice Center, 1700 Monroe Street, Fort Myers, Florida 33901, and show cause if any there be why the prayers of said Complaint for the validation of the Bonds should not be granted and the Bonds, the proceedings therefore, and other matters set forth in said Complaint, should not be validated as prayed for in said Complaint.

IT IS FURTHER ORDERED that prior to the date set for the hearing on said Complaint for validation, the Clerk of this Court shall cause a copy of this Notice and Order to be published in a newspaper published and of general circulation in Lee County, being the County wherein said Complaint for validation is filed, at least once each week for two (2) consecutive weeks, commencing with the first publication which shall not be less than twenty (20) days prior to the date set for said hearing.

IT IS FURTHER ORDERED that by such publication of this Notice and Order, the State of Florida, and the several taxpayers, property owners and citizens of the District, including non-residents owning property or subject to taxation therein, and others having or claiming any rights, title or interest in property to be affected by the issuance of the Bonds and levy of Special Assessments, or to be affected in any way thereby, shall be and are made party defendants to this proceeding, and that this Court shall have jurisdiction of them to the same extent as if specifically and personally named as defendants in said Complaint and personally served with process in this cause.

DONE AND ORDERED in Lee County, Florida.

Alane Laboda, Circuit Court Judge
SRGQCWEh
26-CA-005032 10/09/2026 11:26:38
Electronic Service List:
Jonathan T. Johnson
<jonathan.johnson@kutakrock.com>
Jonathan T. Johnson
<karen jusevitch@kutakrock.com>
Jonathan T. Johnson
<ann.cox@kutakrock.com>
Connie Serrano
<cserrano@SAO20.org>
Connie Serrano
<ServiceSAO-LEE@sao.cjis20.org>
Tyler Patrick Lovejoy
<eservice@sao020.org>
October 16, 23, 2026 26-04487L

FIRST INSERTION

NOTICE OF ACTION FORECLOSURE PROCEEDINGS-PROPERTY
IN THE COUNTY COURT IN AND FOR LEE COUNTY, FLORIDA
CIVIL DIVISION
Case #: 26-CC-005776
Truist Bank
Plaintiff, -vs.-
Deborah A. Anderson a/k/a Deborah Anderson; Nicholas Syczyk a/k/a Nicholas John Syczyk; Unknown Spouse of Deborah A. Anderson a/k/a Deborah Anderson; Unknown Spouse of Nicholas Syczyk a/k/a Nicholas John Syczyk; Wind River Environmental dba A-1 Gator Wastewater Services; Unknown Parties in Possession #1, if living, and all Unknown Parties claiming by, through, under and against the above named Defendant(s); Unknown Parties in Possession #2, if living, and all Unknown Parties claiming by, through, under and against the above named Defendant(s)
Defendant(s).
TO: Deborah A. Anderson a/k/a Deborah Anderson: 6018 Thrush Avenue, Fort Myers, FL 33905 and Unknown Spouse of Deborah A. Anderson a/k/a Deborah Anderson: 6018 Thrush Avenue, Fort Myers, FL 33905
Residence unknown, if living, including any unknown spouse of the said Defendants, if either has remarried and if either or both of said Defendants are dead, their respective unknown heirs, devisees, grantees, assignees, creditors, lienors, and trustees, and all other persons claiming by, through, under or against the named Defendant(s); and the aforementioned named Defendant(s) and such of the aforementioned unknown Defendants and such of the aforementioned unknown Defendants as may be infants, incompetents or otherwise not sui juris.

YOU ARE HEREBY NOTIFIED that an action has been commenced to foreclose a mortgage on the following real property, lying and being and situated in Lee County, Florida, more particularly described as follows:

LOT 4, BLOCK 63, WEST PART UNIT 12 SECTION 3, ACCORDING TO THE PLAT THEREOF AS RECORDED IN PLAT BOOK 26, PAGE(S) 1, PUBLIC RECORDS OF LEE COUNTY, FLORIDA.
more commonly known as 6018 Thrush Avenue, Fort Myers, FL 33905.

This action has been filed against you and you are required to serve a copy of your written defense, if any, upon LOGS LEGAL GROUP LLP, Attorneys for Plaintiff, whose address is 750 Park of Commerce Blvd., Suite 130, Boca Raton, FL 33487, within thirty (30) days after the first publication of this notice and file the original with the clerk of this Court either before with service on Plaintiff's attorney or immediately thereafter; otherwise a default will be entered against you for the relief demanded in the Complaint.

If you are a person with a disability who needs any accommodation in order to participate in this proceeding, you are entitled, at no cost to you, to the provision of certain assistance. Please contact Brooke Dean, Operations Division Manager, whose office is located at Lee County Justice Center, 1700 Monroe Street, Fort Myers, Florida 33901, and whose telephone number is (239) 533-1771, at least 7 days before your scheduled court appearance, or immediately upon receiving this notification if the time before the scheduled appearance is less than 7 days; if you are hearing or voice impaired, call 711.

WITNESS my hand and seal of this Court on the 13th day of October, 2026.

Kevin C. Karnes
Circuit and County Courts
(SEAL) By: K Shoap
Deputy Clerk

LOGS LEGAL GROUP LLP,
Attorneys for Plaintiff,
750 Park of Commerce Blvd., Suite 130,
Boca Raton, FL 33487
26-335519 FC01 SUT
October 16, 23, 2026 26-04461L

Email your Legal Notice
legal@businessobserverfl.com
Deadline Wednesday at noon • Friday Publication

SARASOTA • MANATEE
HILLSBOROUGH • PASCO
PINELLAS • POLK • LEE
COLLIER • CHARLOTTE

FLORIDA'S NEWSPAPER FOR THE C-SUITE
Business Observer
LV20906_V23

SUBSEQUENT INSERTIONS

--- ACTIONS / PUBLIC SALES ---

SECOND INSERTION

Notice of Public Sale

Notice of Public Auction for monies due on storage units. The auction will be held on October 29, 2026 at or after 8:00 am and will continue until finished. Units are said to contain household items. Property sold under Florida Statute 83.806. The names of whose units will be sold are as follows.

Auction will be held online at, Storagetreasures.com/auctions

16901 N. Cleveland Ave
N. Fort Myers, FL 33903

NAME	UNIT	BALANCE
Trevor Evans	3043	$296
Duane Faulkner	2093	$442
RALPH ALTY	1330	$210
JASON STEINSULTZ	1278	$424
Tonia Obrien	3187	$624
Ruol Charles	4046	$549
LJUDMILA BESSARABOVA SEFRIOUI	2125	$420
Arthur E Tellander	1289	$226
brendon bodensky	2061	$420
SARAH CRISP	1174	$392
Yuselys Toledo Millares	1231	$365

11401 S. Cleveland Ave
Fort Myers, FL 33907

NAME	UNIT	BALANCE
JOHN SCOTT	B35	401
RONALD DEAN	1046	260
Judith Blum	A15	330
Myrlande Renald	1241	260

4457 Kernel Cir
Fort Myers, FL 33916

NAME	UNIT	BALANCE
Tamslyn Ravensoul	4006	540

4340 Kernel Cir
Fort Myers, FL 33916

NAME	UNIT	BALANCE
Joan Richards-Summers	7146	490
Ophelia Canady	7089	242
Jackie coleman	7170	244
vicki mcphee-bell	8019	198

October 9, 16, 2026 26-04331L

SECOND INSERTION

NOTICE OF LANDOWNERS' MEETING AND ELECTION OF THE UNIVERSITY VILLAGE COMMUNITY DEVELOPMENT DISTRICT

Notice is hereby given to the public and all landowners within University Village Community Development District (the District), in Lee County, Florida, advising that a meeting of landowners will be held for the purpose of electing three (3) persons to the District Board of Supervisors. Immediately following the landowners meeting, there will be convened a meeting of the Board of Supervisors for the purpose of considering certain matters of the Board to include election of certain District officers, and other such business which may properly come before the Board.

DATE: November 3, 2026
TIME: 11:30 a.m.
PLACE: Miromar Development Corporation,
10801 Corkscrew Road, Suite 305,
Estero, Florida 33928

Each landowner may vote in person or by written proxy. Proxy forms may be obtained upon request at the office of the District Manager, 3820 Colonial Blvd., Suite 101, Fort Myers, FL 33966, or by emailing mgindling@cddmanagement.com or calling (239) 690-7100. At said meeting, each landowner or his or her proxy shall be entitled to nominate persons for the position of Supervisor and cast one vote per acre of land, or fractional portion thereof, owned by him or her and located within the District for each person to be elected to the position of Supervisor. A fraction of an acre shall be treated as one acre, entitling the landowner to one vote with respect thereto. Platted lots shall be counted individually and rounded up to the nearest whole acre. The acreage of platted lots shall not be aggregated for determining the number of voting units held by a landowner or a landowners proxy. At the landowners meeting, the landowners shall select a person to serve as the meeting chair and who shall conduct the meeting. The landowners meeting and the Board of Supervisors meeting are open to the public and will be conducted in accordance with the provisions of Florida law. The meetings may be continued to a date, time, and place to be specified on the record at such meeting. A copy of the agenda for these meetings may be obtained from 3820 Colonial Blvd., Suite 101, Fort Myers, FL 33966, or by visiting the District's website at universityvillagecdd.net. There may be an occasion where one or more supervisors will participate by telephone. Any person requiring special accommodations to participate in these meetings is asked to contact the District Managers Office at (239) 690-7100, at least 48 hours before the hearing. If you are hearing or speech impaired, please contact the Florida Relay Service at (800) 955-8770 for aid in contacting the District Office. A person who decides to appeal any decision made by the Board with respect to any matter considered at the meeting is advised that such person will need a record of the proceedings and that accordingly, the person may need to ensure that a verbatim record of the proceedings is made, including the testimony and evidence upon which the appeal is to be based.

District Manager
October 9, 16, 2026 26-04354L

SUBSCRIBE TO THE BUSINESS OBSERVER
Call: (941) 362-4848 or go to: www.businessobserverfl.com
Business Observer

THIRD INSERTION

NOTICE OF ACTION
IN THE COUNTY COURT OF THE TWENTIETH JUDICIAL CIRCUIT IN AND FOR LEE COUNTY, FLORIDA
CIVIL DIVISION
CASE NO.: 26-CA-002564
NAJMI REALTY, LLC,
A Florida limited liability company,
Plaintiff, vs.
MARIA COLLAZO,
and ALEXANDER RAMIREZ,
Defendants.

TO: Maria Collazo

YOUR ARE NOTIFIED that an action has been filed against you in the Lee County Court of the Twentieth Judicial Circuit, in and for Lee County, Florida, for Specific Performance of a real estate contract, and you are required to serve a copy of your written defenses to it, if any, to: Christine F. Wright, Esq., 923 Del Prado Blvd., Suite 205, Cape Coral, FL 33990, on or before November 9, 2026, and file the original with the Clerk of this Court, at the Lee County Justice Center, 1700 Monroe Street, Fort Myers, Florida, 33901, either before service on Plaintiff's attorney or immediately thereafter; or a default will be entered against you for the relief demanded in the Complaint.

THIS NOTICE will be published once each week for four consecutive weeks in a newspaper of general circulation published in Lee County, Florida.

Dated this 28th day of September, 2026.

Kevin C. Karnes
Clerk of Court
(SEAL) By K Harris
Deputy Clerk

Christine F. Wright, Esq.,
923 Del Prado Blvd., Suite 205,
Cape Coral, FL 33990
October 2, 9, 16, 23, 2026
26-04086L

THIRD INSERTION

NOTICE OF ACTION FOR PUBLICATION
IN THE CIRCUIT COURT OF THE TWENTIETH JUDICIAL CIRCUIT, IN AND FOR LEE COUNTY, FLORIDA
Case No.: 26-DR-6218
Division: FAMILY
IN RE: THE MARRIAGE OF:
AUSTIN ROSE,
Petitioner, And
ROXANA K. COELLO ZAMBRANO,
Respondent.

TO: ROXANA K. COELLO ZAMBRANO
7250 Penzance Blvd, #709
Fort Myers, Florida 33966

YOU ARE NOTIFIED that an action for Dissolution of Marriage, including claims for dissolution of marriage, payment of debts, division of real and personal property, and for payments of support, has been filed against you. You are required to serve a copy of your written defenses, if any, to this action on Michele S. Belmont, Petitioner's attorney, whose address is 8270 College Parkway, #201, Fort Myers, FL 33919, on or before 11/04/2026, and file the original with the clerk of this court at Lee County Courthouse, 1700 Monroe Street, Fort Myers, 33901, either before service on Petitioner's attorney or immediately thereafter; otherwise a default will be entered against you for the relief demanded in the petition.

WARNING: Rule 12.285, Florida Family Law Rules of Procedure, requires certain automatic disclosure of documents and information. Failure to comply can result in sanctions, including dismissal or striking of pleadings.

DATED this 25th day of September, 2026.

Kevin C. Karnes
CLERK OF THE CIRCUIT COURT
(SEAL) By: B. Willey
Deputy Clerk

Oct. 2, 9, 16, 23, 2026 26-04070L

PUBLISH YOUR LEGAL NOTICE

We publish all Public sale, Estate & Court-related notices

- Simply email your notice to legal@businessobserverfl.com
- We offer an online payment portal for easy credit card payment
- Service includes us e-filing your affidavit to the Clerk's office on your behalf

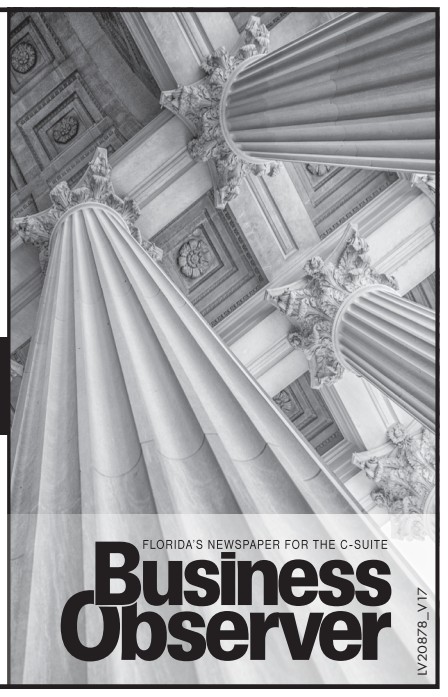

FLORIDA'S NEWSPAPER FOR THE C-SUITE
Business Observer
LV20878_V17

--- PUBLIC SALES, ACTIONS ---

SECOND INSERTION

NOTICE OF PUBLIC SALE

at
The Lock Up Self Storage
5500 Timmers Lane
Lehigh Acres Fl 33971

Will sell the contents of the following units to satisfy a lien to the highest bidder on October 23, 2026 by 10:00 am at WWW.STORAGETREASURES.COM All goods must be removed from the unit within 48 hours. Unit availability subject to prior settlement of account.

Unit 1038-Toccara Gilmore-Party décor, games, boxes, party supplies
Unit 3087-Serena Flores-totes, boxes, entertainment center, wall art, mattress, clothes, tv, furniture
Unit 3013-Desirea Wallace-totes, luggage, household items, vacuum, shoes, wall art, misc furniture
Unit 3217-Sean Cunningham-totes, household goods, bar stools, assorted boxes, tv, home décor
Unit 2025-Lillian Michalek-boxes, totes, clothes, wall art, stuffed animals, chairs, end table

October 9, 16, 2026 26-04333L

SECOND INSERTION

NOTICE OF PUBLIC SALE

at
The Lock Up Self Storage
12700 University Dr
Fort Myers, FL 33907

Will sell the contents of the following units to satisfy a lien to the highest bidder on October 23rd, 2026 by 10:30am at WWW.STORAGETREASURES.COM All goods must be removed from the unit within 48 hours. Unit availability subject to prior settlement of account.

Unit 4106: Tom Wiley, Fishing Poles, Fishing Tackle, TV Trays, Foldable Bed Frames; Unit 4708: Sean Lintner, Clothing, Mattress, Box Spring, Shelving, Boxes, Ladder, Car Seat, Record Albums, Electronics, Speakers, Sony PS3, Wall Art, Star Wars Memorabilia; Unit 4711: Manuel Rodriguez, Clothing, Shoes/Sneakers, Boxes, Totes, Barbershop Pole, Large Flat screen TV, Sofa, Medical Oxygen Tank

October 9, 16, 2026 26-04287L

SECOND INSERTION

NOTICE OF PUBLIC SALE

at
The Lock Up Self Storage
9901 Estero Oaks Drive
Estero FL 33967

Will sell the contents of the following units to satisfy a lien to the highest bidder on October 23rd, 2026 by 11:30 am at: WWW.STORAGETREASURES.COM All goods must be removed from the unit within 48 hours. Unit availability subject to prior settlement of account.

Unit 2317- Eddie Tovar
Items: luggage, vacuum, kid's rocker, plastic tubes, misc household items

October 9, 16, 2026 26-04288L

SECOND INSERTION

NOTICE OF LANDOWNERS' MEETING AND ELECTION OF THE UNIVERSITY SQUARE COMMUNITY DEVELOPMENT DISTRICT

Notice is hereby given to the public and all landowners within University Square Community Development District (the District), in Lee County, Florida, advising that a meeting of landowners will be held for the purpose of electing three (3) persons to the District Board of Supervisors. Immediately following the landowners meeting, there will be convened a meeting of the Board of Supervisors for the purpose of considering certain matters of the Board to include election of certain District officers, and other such business which may properly come before the Board.

DATE: November 3, 2026
TIME: 12:00 p.m.
PLACE: Miromar Development Corporation,
10801 Corkscrew Road, Suite 305,
Estero, Florida 33928

Each landowner may vote in person or by written proxy. Proxy forms may be obtained upon request at the office of the District Manager, 3820 Colonial Blvd., Suite 101, Fort Myers, FL 33966, or by emailing mgindling@cddmanagement.com or calling (239) 690-7100. At said meeting, each landowner or his or her proxy shall be entitled to nominate persons for the position of Supervisor and cast one vote per acre of land, or fractional portion thereof, owned by him or her and located within the District for each person to be elected to the position of Supervisor. A fraction of an acre shall be treated as one acre, entitling the landowner to one vote with respect thereto. Platted lots shall be counted individually and rounded up to the nearest whole acre. The acreage of platted lots shall not be aggregated for determining the number of voting units held by a landowner or a landowners proxy. At the landowners meeting, the landowners shall select a person to serve as the meeting chair and who shall conduct the meeting. The landowners meeting and the Board of Supervisors meeting are open to the public and will be conducted in accordance with the provisions of Florida law. The meetings may be continued to a date, time, and place to be specified on the record at such meeting. A copy of the agenda for these meetings may be obtained from 3820 Colonial Blvd., Suite 101, Fort Myers, FL 33966, or by visiting the District's website at universitysquarecdd.net. There may be an occasion where one or more supervisors will participate by telephone. Any person requiring special accommodations to participate in these meetings is asked to contact the District Managers Office at (239) 690-7100, at least 48 hours before the hearing. If you are hearing or speech impaired, please contact the Florida Relay Service at (800) 955-8770 for aid in contacting the District Office. A person who decides to appeal any decision made by the Board with respect to any matter considered at the meeting is advised that such person will need a record of the proceedings and that accordingly, the person may need to ensure that a verbatim record of the proceedings is made, including the testimony and evidence upon which the appeal is to be based.

District Manager
October 9, 16, 2026 26-04343L

SECOND INSERTION

NOTICE OF LANDOWNERS' MEETING AND ELECTION OF THE BABCOCK RANCH COMMUNITY INDEPENDENT SPECIAL DISTRICT

Notice is hereby given to the public and all landowners within Babcock Ranch Community Independent Special District ("**District**") located within Charlotte and Lee Counties, Florida, advising that a meeting of landowners will be held for the purpose of electing one (1) person to the District's Governing Board ("**Board**").

DATE:	November 3, 2026
TIME:	4:00 P.M.
PLACE:	Lake Timber Lodge 42147 Lake Timber Drive Punta Gorda, Florida 33982

Each landowner may vote in person or by written proxy. Proxy forms may be obtained upon request at the office of the District Manager, 2300 Glades Road, Suite 410W, Boca Raton, Florida 33431, Ph: (561) 571-0010 ("**District Manager's Office**"). At said meeting each landowner or his or her proxy shall be entitled to nominate persons for the position of Board Member and cast one vote per acre of land, or fractional portion thereof, owned by him or her and located within the District for each person to be elected to the position of Board Member. A fraction of an acre shall be treated as one acre, entitling the landowner to one vote with respect thereto. Platted lots shall be counted individually and rounded up to the nearest whole acre. The acreage of platted lots shall not be aggregated for determining the number of voting units held by a landowner or a landowner's proxy. At the landowners' meeting the landowners shall select a person to serve as the meeting chair and who shall conduct the meeting.

The landowners' meeting is open to the public and will be conducted in accordance with the provisions of Florida law. The meeting may be continued to a date, time, and place to be specified on the record at such meeting. A copy of the agenda for the meeting may be obtained from the District Manager's Office. There may be an occasion where one or more supervisors will participate by telephone.

Any person requiring special accommodations to participate in the meeting is asked to contact the District Manager's Office, at least 48 hours before the meeting. If you are hearing or speech impaired, please contact the Florida Relay Service by dialing 7-1-1, or 1-800-955-8771 (TTY) / 1-800-955-8770 (Voice), for aid in contacting the District Manager's Office.

A person who decides to appeal any decision made by the Board with respect to any matter considered at the meeting is advised that such person will need a record of the proceedings and that accordingly, the person may need to ensure that a verbatim record of the proceedings is made, including the testimony and evidence upon which the appeal is to be based.

Cindy Cerbone
District Manager
October 9, 16, 2026 26-04320L

FOURTH INSERTION

NOTICE OF ACTION FOR PUBLICATION
IN THE CIRCUIT COURT OF THE TWENTIETH JUDICIAL CIRCUIT IN AND FOR LEE COUNTY, FLORIDA
CIVIL ACTION
CASE NO. 26-DR-4245
Judge: Elisabeth Adams
In re the Marriage of:
ROMAIN CALVIN GRANT,
Petitioner,
and
SHERMAINE STAR GRANT,
Respondent.

TO: SHERMAINE STAR GRANT
Last Known Address:
4735 Cypress Gardens Loop Apt 3208,
Fort Myers, FL 33966

YOU ARE NOTIFIED that an action for Dissolution of Marriage with Minor Children and Property including claims for dissolution of marriage with marital assets or liabilities, distribution of non-marital property and a parenting schedule has been filed against you and you are required to serve a copy of your written defenses, if any, to this action on KATHERYN E. SMITH CALVO, Esq., of Calvo & Calvo, Attorneys at Law, Petitioner's Attorney, whose address is 1534 Jackson Street, Fort Myers, FL 33901, on or before 11/02/2026, and file the original with the clerk of this court at Lee County Courthouse, 1700 Monroe Street, Fort Myers, Florida 33901, either before service on Petitioner's attorney or immediately thereafter; otherwise a default will be entered against you for the relief demanded in the petition.

WARNING: Rule 12.285, Florida Family Law Rules of Procedure, requires certain automatic disclosure of documents and information. Failure to comply can result in sanctions, including dismissal or striking of pleadings.

DATED this 09/21/2026.

Kevin C. Karnes
Clerk of the Circuit Court
(SEAL) By: B Willey
Deputy Clerk

Sept. 25; Oct. 2, 9, 16, 2026
26-04001L

FOURTH INSERTION

NOTICE OF ACTION FOR DISSOLUTION OF MARRIAGE (NO CHILD OR FINANCIAL SUPPORT)
IN THE CIRCUIT COURT OF THE TWENTIETH JUDICIAL CIRCUIT, IN AND FOR LEE COUNTY, FLORIDA
CASE NO: 26-DR-006479
IN RE: The Marriage of
Elizabeth Ellen Dekle
Petitioner
and
Joseph Byron Dekle
Respondent

TO: Joseph Byron Dekle
1666 Tibbets Street SE, Palm Bay, Florida 32909-5701

YOU ARE NOTIFIED that an action for dissolution of marriage has been filed against you and that you are required to serve a copy of your written defenses, if any, to it on Elizabeth Ellen Dekle whose address is 18923 Randall Place, Land O Lakes, Florida 34638 on or before 10/26/2026, and file the original with the clerk of this Court at 1700 Monroe Street, Fort Myers, Florida 33901 before service on Petitioner or immediately thereafter. If you fail to do so, a default may be entered against you for the relief demanded in the petition.

Copies of all court documents in this case, including orders, are available at the Clerk of Circuit Court's office. You may review these documents upon request.

You must keep the Clerk of the Circuit Court's office notified of your current address. (You may file Designation of Current Mailing and E-Mail Address, Florida Supreme Court Approved Family Law Form 12.915.) Future papers in this lawsuit will be mailed or e-mailed to the address(es) on record at the clerk's office.

WARNING: Rule 12.285, Florida Family Law Rules of Procedure, requires certain automatic disclosure of documents and information. Failure to comply can result in sanctions, including dismissal or striking of pleadings.

Dated: 09/14/2026

Kevin C. Karnes
CLERK OF THE CIRCUIT COURT
(SEAL) By: B Willey
Deputy Clerk

Sept. 25; Oct. 2, 9, 16, 2026
26-04000L

SECOND INSERTION

NOTICE OF PUBLIC SALE

To satisfy the owner's storage lien, PS Retail Sales, LLC will sell at public lien sale on October 26, 2026, the personal property in the below-listed units, which may include but are not limited to: household and personal items, office and other equipment. The public sale of these items will begin at 11:00 AM and continue until all units are sold. The lien sale is to be held at the online auction website, www.storagetreasures.com, where indicated. For online lien sales, bids will be accepted until 2 hours after the time of the sale specified.

PUBLIC STORAGE # 25841, 8953 Terrene Ct, Bonita Springs, FL 34135, (305) 501-4721
Time: 11:00 AM
Sale to be held at www.storagetreasures.com.
0105E - Taylor, Nicholas; 0324F - Miguel, Petrona; 1002G - Nixon, Jeffery; 3005G - luu, Jason; 5005 - Nimmons, Christopher; 8001 - Spies, Darryl

Public sale terms, rules, and regulations will be made available prior to the sale. All sales are subject to cancellation. We reserve the right to refuse any bid. Payment must be in cash or credit card-no checks. Buyers must secure the units with their own personal locks. To claim tax-exempt status, original RESALE certificates for each space purchased is required. By PS Retail Sales, LLC, 701 Western Avenue, Glendale, CA 91201. (818) 244-8080.

October 9, 16, 2026 26-04242L

SECOND INSERTION

NOTICE OF PUBLIC SALE

To satisfy the owner's storage lien, PS Retail Sales, LLC will sell at public lien sale on October 27, 2026, the personal property in the below-listed units, which may include but are not limited to: household and personal items, office and other equipment. The public sale of these items will begin at 09:30 AM and continue until all units are sold. The lien sale is to be held at the online auction website, www.storagetreasures.com, where indicated. For online lien sales, bids will be accepted until 2 hours after the time of the sale specified.

PUBLIC STORAGE # 30115, 1521 Del Prado Blvd N, Cape Coral, FL 33909, (239) 984-6443
Time: 09:30 AM
Sale to be held at www.storagetreasures.com.
02005 - Duvall, Jennifer; 02022 - Acosta, Nestor; 02025 - Echememdia, Hugo; 03022 - Quiroz, Edwin; 04011 - Torres, David; 11095 - Leonetti, Elena; 12003 - Hernandez, Rogelio; 12024 - Willis, Bernadette; 12043 - Smith, Justin; 12090 - Sarabaza, Maikal

PUBLIC STORAGE # 00126, 11995 State Rd 82, Fort Myers, FL 33913, (941) 259-4534
Time: 09:45 AM
Sale to be held at www.storagetreasures.com.
1043 - Hernandez, Gabrielle; 1072 - Bond, Brittany; 1108 - Araujo, Leonardo Prado; 1153 - Jeanmary, Nadeje; 1157 - Walsh, James; 1211 - Laurevil, Della; 1279 - Vargas, Alvaro J; 2049 - Rodriguez, Angel; 2077 - Gordon, Usdra; 2215 - Martinez, Nathalia; 3039 - Mobley, John; 3184 - Hale, Christopher; 3251 - Schmitt, Aaron; 3296 - Villanueva, Hazael

PUBLIC STORAGE # 27142, 10688 Colonial Blvd, Fort Myers, FL 33913, (239) 310-6447
Time: 10:00 AM
Sale to be held at www.storagetreasures.com.
1024 - Allen, Jordan; 1115 - Spanulo, Jillian; 1163 - Tyler, Juliann; 1504 - Malbone, Ryan; 2047 - Ross, Felicity; 2053 - Rivera, Ezequiel; 2155 - Williams, Kendra; 2366 - german, Joanna; 2372 - Juan, Tomas

PUBLIC STORAGE # 30126, 12859 McGregor Blvd, Fort Myers, FL 33919, (239) 236-4223
Time: 10:15 AM
Sale to be held at www.storagetreasures.com.
0110 - Arpino, Laura; 0188 - Arpino, Laura; 0343 - Hendry, Elizabeth; 0801 - Pester, Sandra; 0827 - Kulcsar, Peter; 0828 - Kulcsar, Peter; 0844 - Floyd, Jason; 3200 - Blanchette, Michael; 4223 - morse, Tyrone

PUBLIC STORAGE # 68035, 3300 Chiquita Blvd S, Cape Coral, FL 33914, (239) 214-7556
Time: 10:30 AM
Sale to be held at www.storagetreasures.com.
A016 - Mazur, Lee; A254 - perez, ariel; D155 - Long, Thea; E018 - Thuma, Amy

PUBLIC STORAGE # 25805, 3232 Colonial Blvd, Fort Myers, FL 33966, (305) 204-9211
Time: 10:45 AM
Sale to be held at www.storagetreasures.com.
0079 - Rodriguez, Jazmine; 0143 - Frais, Shidney; 0214 - Datus, Tori N; 0390 - Hand, Justin; 0398 - Sr., Jonathan Vance; 0460 - Hooks, Gregory; 0529 - Bentley, Marion Wayne; 0614 - Roper, Davonte; 0674 - Rivera, Roberto; 1015 - Allen, Deshawn; 1323 - Edwards Jr., Wade; 1394 - Yannette, Amrapali

PUBLIC STORAGE # 68038, 13701 Indian Paint Ln, Fort Myers, FL 33912, (239) 999-3685
Time: 11:00 AM
Sale to be held at www.storagetreasures.com.
1026 - Lee, George; 1345 - Neal, James; 3004 - Lee, George; 3035 - Gianferrara, Daniel; 3040 - Sayago, Miguel; 3048 - Garrett, Richard; 3066 - Gequelin, Lilian; 5001 - Lee, George; 5012 - Belt, Lisa

PUBLIC STORAGE # 25843, 2235 Colonial Blvd, Fort Myers, FL 33907, (941) 257-5489
Time: 11:15 AM
Sale to be held at www.storagetreasures.com.
054 - Staton, Kimberly; 086 - Nucamendi, Rebecca; 121 - Montgomery, Jeff; 169 - Davis, Jamal; 213 - Feliciano, Evaristo; 266 - Jennings, Denatro; 328 - German, Marlon; 375 - Hiolite, Jonathan; 377 - Bonnet, Djinise; 405 - Teal, Cliffonny; 412 - Walsh, James; 505 - White, Barry; 506 - palmer, Christopher; 529 - Ciarlo, Richard; 951 - Morgan, Annie; 966 - Vargas, Joseph; A13 - Polanco, Alexander

PUBLIC STORAGE # 25844, 11181 Kelly Rd, Fort Myers, FL 33908, (941) 270-9635
Time: 11:30 AM
Sale to be held at www.storagetreasures.com.
B324 - cannady, Antorneshia; C454 - Bustamante, Maria; C465 - Bustamante, Maria ; C467 - Eliopoulos, Holly; C492 - Swary, Jahmoor; P024 - Swary, Jahmoor; P036 - Lopez, Ricardo

PUBLIC STORAGE # 68044, 14150 N Cleveland Avenue, North Fort Myers, FL 33903, (239) 294-3239
Time: 11:45 AM
Sale to be held at www.storagetreasures.com.
0065 - Hein, Victor; 0202 - Livolsi, Elizabeth; 0320 - East, Georgia; 0404 - Mckinney, Jadara; 0481 - Rule, Mark; 0601 - Lee, Joy Nichole; 0916 - Hedden, Christopher; 1600 - Brown, Calvin; 1701 - Thomas, Harold; 1708 - Gloster, William; 1709 - Ramirez , Joel; 1807 - Ruiz Pasquel, Carol

PUBLIC STORAGE # 68156, 14251 N Cleveland Ave, North Fort Myers, FL 33903, (239) 790-8265
Time: 12:00 PM
Sale to be held at www.storagetreasures.com.
0005 - West, Charles ; 0018 - Rogate, Michael; 0029 - Torres, Gloriellys; 1137 - Nunnally, Renee; 2040 - Lingor, Tammy; 2078 - Gutierrez, Sonia; 2153 - Sloan, jerrica; 2210 - Henry, Keston; 2283 - Ramirez, Tony; 3004 - Matz, Richard; 3010 - Lee, Amanda; 3101 - Williams, Coletta; 3143 - rhodes, Michele

PUBLIC STORAGE # 27143, 20091 Tiburon Way, Estero, FL 33928, (239) 676-6571
Time: 12:15 PM
Sale to be held at www.storagetreasures.com.
2063 - Kern, Amanda; 3162 - Medina, Angela

PUBLIC STORAGE # 27263, 11800 S Cleveland Ave, Fort Myers, FL 33907, (941) 348-6897
Time: 12:30 PM
Sale to be held at www.storagetreasures.com.
B015 - Alvarez Signs Alvarez, Vladimir; B075 - Meza, Sherina; B076 - Lanzillo, Jason; B092 - Rodriguez, Erik; F003 - Mckee, Erin; F014 - Brackett, Madison; H008 - Brown, Michael; H024 - paz, Marcos; H064 - Wissler, Paul

PUBLIC STORAGE # 28082, 5036 S Cleveland Ave, Fort Myers, FL 33907, (941) 548-6811
Time: 12:45 PM
Sale to be held at www.storagetreasures.com.
A003C - Williams, Craig; B021 - Forbes, Joseph Morales; C054 - Cyr, Pam; D090 - Saucier, Jason; D135 - Robinson, Katwila; E171 - Gonzales, Daniel; E179 - III, Stephen Stahl; F197 - Sylvia, Craig; H253 - Horvath, Dina; I308 - Santiago Otero, Keila; I351 - askew, William; L485 - Perez Recio, Ydalis Inocencia

PUBLIC STORAGE # 27679, 780 NE 19th Pl, Cape Coral, FL 33909, (239) 643-6200
Time: 01:00 PM
Sale to be held at www.storagetreasures.com.
111037 - Lyons, Paul; 1113 - Suthard, Frances; 2033 - Watkins, Florence; 2049 - Monclerc, Tanya; 2070 - Quintana, Donna; 2129 - Gayle, Denis; 2180 - Roberson, Brian; 2191 - Hamilton, Lorrin; 3145 - robersin, Brian; 3231 - Montealegre, Nattaly; 5028 - richards, Jason

PUBLIC STORAGE # 77904, 1607 Diplomat Pkwy E, Cape Coral, FL 33909, (239) 785-2923
Time: 01:15 PM
Sale to be held at www.storagetreasures.com.
1141 - Melton, Gerald; 1145 - Faiella, Regina; 2060 - Washington, Kaye

Public sale terms, rules, and regulations will be made available prior to the sale. All sales are subject to cancellation. We reserve the right to refuse any bid. Payment must be in cash or credit card-no checks. Buyers must secure the units with their own personal locks. To claim tax-exempt status, original RESALE certificates for each space purchased is required. By PS Retail Sales, LLC, 701 Western Avenue, Glendale, CA 91201. (818) 244-8080.

October 9, 16, 2026 26-04241L

SECOND INSERTION

NOTICE OF PUBLIC SALE

Notice is hereby given that on 10/23/2026, at 10:30AM, the following property will be sold at public auction pursuant to F.S. 715.109: A 1967 TROP mobile home bearing vehicle identification number 357 and all personal items located inside the mobile home. Last Tenant: Constance Aliece Smaller a/k/a Connie Smaller. Sale to be held at: Twin Pines Village, 4422 Mailbox Avenue, Lot No. 152, North Fort Myers, Florida 33903, (239)790-1796.

October 9, 16, 2026 26-04332L

--- TAX DEEDS ---

SECOND INSERTION

NOTICE OF APPLICATION FOR TAX DEED
Section 197.512 F.S.

Tax Deed #:2026000700

NOTICE IS HEREBY GIVEN that Savvy FL LLC First Horizon Collateral Assignee the holder of the following certificate(s) has filed said certificate(s) for a tax deed to be issued thereon. The certificate number(s), year(s) of issuance, the description of the property and the name(s) in which it was assessed are as follows:

Certificate Number: 24-07281 Year of Issuance 2024 Description of Property LOT(S) 1 AND 2, BLOCK 1329, CAPE CORAL SUBDIVISION, UNIT 18, ACCORDING TO THE PLAT THEREOF, AS RECORDED IN PLAT BOOK 13, PAGES 96-120 OF THE PUBLIC RECORDS OF LEE COUNTY, FLORIDA. Strap Number 17-44-24-C1-01329.0010

Names in which assessed: JAMES S THOMSON, JAMES THOMSON

All of said property being in the County of Lee, State of Florida. Unless such certificate(s) shall be redeemed according to the law the property described in such certificate(s) will be sold to the highest bidder online at www.lee.realtaxdeed.com on 12/01/2026 at 10:00 am, by Kevin C. Karnes, Lee County Clerk of the Circuit Court & Comptroller.

October 9, 16, 23, 30, 2026

26-04171L

SECOND INSERTION

NOTICE OF APPLICATION FOR TAX DEED
Section 197.512 F.S.

Tax Deed #:2026000629

NOTICE IS HEREBY GIVEN that Savvy FL LLC First Horizon Collateral Assignee the holder of the following certificate(s) has filed said certificate(s) for a tax deed to be issued thereon. The certificate number(s), year(s) of issuance, the description of the property and the name(s) in which it was assessed are as follows:

Certificate Number: 24-06228 Year of Issuance 2024 Description of Property LOTS 35 AND 36, BLOCK 2130, UNIT 32, CAPE CORAL SUBDIVISION, ACCORDING TO THE PLAT THEREOF, RECORDED IN PLAT BOOK 16, PAGES 1 THROUGH 13, INCLUSIVE, OF THE PUBLIC RECORDS OF LEE COUNTY, FLORIDA. Strap Number 31-43-24-C2-02130.0350

Names in which assessed: SANDRA AUSENON

All of said property being in the County of Lee, State of Florida. Unless such certificate(s) shall be redeemed according to the law the property described in such certificate(s) will be sold to the highest bidder online at www.lee.realtaxdeed.com on 12/01/2026 at 10:00 am, by Kevin C. Karnes, Lee County Clerk of the Circuit Court & Comptroller.

October 9, 16, 23, 30, 2026

26-04166L

SECOND INSERTION

NOTICE OF APPLICATION FOR TAX DEED
Section 197.512 F.S.

Tax Deed #:2026000733

NOTICE IS HEREBY GIVEN that Savvy FL LLC First Horizon Collateral Assignee the holder of the following certificate(s) has filed said certificate(s) for a tax deed to be issued thereon. The certificate number(s), year(s) of issuance, the description of the property and the name(s) in which it was assessed are as follows:

Certificate Number: 24-06023 Year of Issuance 2024 Description of Property LOT 7, THE WEST HALF OF LOT 8 AND THE NORTH 10 FEET OF LOT 6, MCCLAIN SUBDIVISION, ACCORDING TO THE PLAT THEREOF RECORDED IN PLAT BOOK 10, PAGE 57, PUBLIC RECORDS OF LEE COUNTY, FLORIDA. Strap Number 26-43-24-01-00007.0000

Names in which assessed: ENZO RIZZI, JOHN HUNTEN, MARIA P RIZZI, MARIA RIZZI

All of said property being in the County of Lee, State of Florida. Unless such certificate(s) shall be redeemed according to the law the property described in such certificate(s) will be sold to the highest bidder online at www.lee.realtaxdeed.com on 12/01/2026 at 10:00 am, by Kevin C. Karnes, Lee County Clerk of the Circuit Court & Comptroller.

October 9, 16, 23, 30, 2026

26-04162L

SECOND INSERTION

NOTICE OF APPLICATION FOR TAX DEED
Section 197.512 F.S.

Tax Deed #:2026000698

NOTICE IS HEREBY GIVEN that Savvy FL LLC First Horizon Collateral Assignee the holder of the following certificate(s) has filed said certificate(s) for a tax deed to be issued thereon. The certificate number(s), year(s) of issuance, the description of the property and the name(s) in which it was assessed are as follows:

Certificate Number: 24-05319 Year of Issuance 2024 Description of Property LOTS 10 AND 11, BLOCK 5818, CAPE CORAL, UNIT 88, ACCORDING TO THE PLAT THEREOF AS RECORDED IN PLAT BOOK 24, PAGES 127 THROUGH 143, PUBLIC RECORDS OF LEE COUNTY, FLORIDA. Strap Number 17-43-24-C1-05818.0100

Names in which assessed: WALDORF BROKERS INC., WALDORF BROKERS, INC.

All of said property being in the County of Lee, State of Florida. Unless such certificate(s) shall be redeemed according to the law the property described in such certificate(s) will be sold to the highest bidder online at www.lee.realtaxdeed.com on 12/01/2026 at 10:00 am, by Kevin C. Karnes, Lee County Clerk of the Circuit Court & Comptroller.

October 9, 16, 23, 30, 2026

26-04160L

SECOND INSERTION

NOTICE OF APPLICATION FOR TAX DEED
Section 197.512 F.S.

Tax Deed #:2026000728

NOTICE IS HEREBY GIVEN that Savvy FL LLC First Horizon Collateral Assignee the holder of the following certificate(s) has filed said certificate(s) for a tax deed to be issued thereon. The certificate number(s), year(s) of issuance, the description of the property and the name(s) in which it was assessed are as follows:

Certificate Number: 24-00451 Year of Issuance 2024 Description of Property LOTS 11 AND 12, BLOCK 5192, UNIT 83, CAPE CORAL SUBDIVISION, ACCORDING TO THE PLAT THEREOF, AS RECORDED IN PLAT BOOK 23, PAGES 41 THROUGH 54, INCLUSIVE, OF THE PUBLIC RECORDS OF LEE COUNTY, FLORIDA Strap Number 25-43-22-C4-05192.0110

Names in which assessed: DABAS REAL ESTATE LLC

All of said property being in the County of Lee, State of Florida. Unless such certificate(s) shall be redeemed according to the law the property described in such certificate(s) will be sold to the highest bidder online at www.lee.realtaxdeed.com on 12/01/2026 at 10:00 am, by Kevin C. Karnes, Lee County Clerk of the Circuit Court & Comptroller.

October 9, 16, 23, 30, 2026

26-04151L

SECOND INSERTION

NOTICE OF APPLICATION FOR TAX DEED
Section 197.512 F.S.

Tax Deed #:2026000787

NOTICE IS HEREBY GIVEN that Buffalo Bill LLC the holder of the following certificate(s) has filed said certificate(s) for a tax deed to be issued thereon. The certificate number(s), year(s) of issuance, the description of the property and the name(s) in which it was assessed are as follows:

Certificate Number: 24-01654 Year of Issuance 2024 Description of Property LOT(S) 12 & 13, BLOCK 5079, UNIT 80, CAPE CORAL SUBDIVISION, ACCORDING TO THE PLAT THEREOF, AS RECORDED IN PLAT BOOK 22, PAGE(S) 140 TO 159, INCLUSIVE, IN THE PUBLIC RECORDS OF LEE COUNTY, FLORIDA. Strap Number 28-43-23-C3-05079.0120

Names in which assessed: JOHN IBBITSON, TRACI IBBITSON

All of said property being in the County of Lee, State of Florida. Unless such certificate(s) shall be redeemed according to the law the property described in such certificate(s) will be sold to the highest bidder online at www.lee.realtaxdeed.com on 12/01/2026 at 10:00 am, by Kevin C. Karnes, Lee County Clerk of the Circuit Court & Comptroller.

October 9, 16, 23, 30, 2026

26-04149L

SECOND INSERTION

NOTICE OF APPLICATION FOR TAX DEED
Section 197.512 F.S.

Tax Deed #:2026000716

NOTICE IS HEREBY GIVEN that Savvy FL LLC First Horizon Collateral Assignee the holder of the following certificate(s) has filed said certificate(s) for a tax deed to be issued thereon. The certificate number(s), year(s) of issuance, the description of the property and the name(s) in which it was assessed are as follows:

Certificate Number: 24-23798 Year of Issuance 2024 Description of Property LOT 12, BLOCK 42, UNIT 8, SECTION 21, TOWNSHIP 45 SOUTH, RANGE 27 EAST, LEHIGH ACRES, FLORIDA, ACCORDING TO THE MAP OR PLAT THEREOF ON FILE IN THE OFFICE OF THE CLERK OF THE CIRCUIT COURT, RECORDED IN PLAT BOOK 18, PAGE 61, PUBLIC RECORDS, LEE COUNTY, FLORIDA Strap Number 21-45-27-08-00042.0120

Names in which assessed: RAYMOND H LYELL, THERESE C LYELL

All of said property being in the County of Lee, State of Florida. Unless such certificate(s) shall be redeemed according to the law the property described in such certificate(s) will be sold to the highest bidder online at www.lee.realtaxdeed.com on 12/01/2026 at 10:00 am, by Kevin C. Karnes, Lee County Clerk of the Circuit Court & Comptroller.

October 9, 16, 23, 30, 2026

26-04222L

SECOND INSERTION

NOTICE OF APPLICATION FOR TAX DEED
Section 197.512 F.S.

Tax Deed #:2026000617

NOTICE IS HEREBY GIVEN that Savvy FL LLC First Horizon Collateral Assignee the holder of the following certificate(s) has filed said certificate(s) for a tax deed to be issued thereon. The certificate number(s), year(s) of issuance, the description of the property and the name(s) in which it was assessed are as follows:

Certificate Number: 24-20306 Year of Issuance 2024 Description of Property LOT 10, BLOCK 37, UNIT 11, LEHIGH ACRES, SECTION 22, TOWNSHIP 44 SOUTH, RANGE 27 EAST, ACCORDING TO THE MAP OR PLAT THEREOF ON FILE IN THE OFFICE OF THE CLERK OF THE CIRCUIT COURT, RECORDED IN PLAT BOOK 15, PAGE 33, PUBLIC RECORDS OF LEE COUNTY, FLORIDA. Strap Number 22-44-27-11-00037.0100

Names in which assessed: ESTATE OF EVERARD R. BROWN, EVERARD R BROWN

All of said property being in the County of Lee, State of Florida. Unless such certificate(s) shall be redeemed according to the law the property described in such certificate(s) will be sold to the highest bidder online at www.lee.realtaxdeed.com on 12/01/2026 at 10:00 am, by Kevin C. Karnes, Lee County Clerk of the Circuit Court & Comptroller.

October 9, 16, 23, 30, 2026

26-04216L

SECOND INSERTION

NOTICE OF APPLICATION FOR TAX DEED
Section 197.512 F.S.

Tax Deed #:2026000603

NOTICE IS HEREBY GIVEN that Savvy FL LLC First Horizon Collateral Assignee the holder of the following certificate(s) has filed said certificate(s) for a tax deed to be issued thereon. The certificate number(s), year(s) of issuance, the description of the property and the name(s) in which it was assessed are as follows:

Certificate Number: 24-19175 Year of Issuance 2024 Description of Property WEST 1/2 OF LOT 1, BLOCK 27, UNIT 7, SECTION 12, TOWNSHIP 44 SOUTH, RANGE 27 EAST, LEHIGH ACRES, ACCORDING TO THE MAP OR PLAT THEREOF ON FILE IN THE OFFICE OF THE CLERK OF THE CIRCUIT COURT, RECORDED IN PLAT BOOK 15, PAGE 14, PUBLIC RECORDS OF LEE COUNTY, FLORIDA. Strap Number 12-44-27-07-00027.001A

Names in which assessed: ESTATE OF FRANCES STORY, FRANCES STORY

All of said property being in the County of Lee, State of Florida. Unless such certificate(s) shall be redeemed according to the law the property described in such certificate(s) will be sold to the highest bidder online at www.lee.realtaxdeed.com on 12/01/2026 at 10:00 am, by Kevin C. Karnes, Lee County Clerk of the Circuit Court & Comptroller.

October 9, 16, 23, 30, 2026

26-04208L

SECOND INSERTION

NOTICE OF APPLICATION FOR TAX DEED
Section 197.512 F.S.

Tax Deed #:2026000600

NOTICE IS HEREBY GIVEN that Savvy FL LLC First Horizon Collateral Assignee the holder of the following certificate(s) has filed said certificate(s) for a tax deed to be issued thereon. The certificate number(s), year(s) of issuance, the description of the property and the name(s) in which it was assessed are as follows:

Certificate Number: 24-13383 Year of Issuance 2024 Description of Property LOT 28, BLOCK 28, UNIT 6, SECTION 3, TOWNSHIP 44 SOUTH, RANGE 26 EAST, LEHIGH ACRES, FLORIDA, ACCORDING TO THE MAP OR PLAT THEREOF ON FILE IN THE OFFICE OF THE CLERK OF THE CIRCUIT COURT, RECORDED IN PLAT BOOK 26, PAGE 8, PUBLIC RECORDS, LEE COUNTY, FLORIDA. Strap Number 03-44-26-06-00028.0280

Names in which assessed: ROBERT F MILLER, RUBY J MILLER

All of said property being in the County of Lee, State of Florida. Unless such certificate(s) shall be redeemed according to the law the property described in such certificate(s) will be sold to the highest bidder online at www.lee.realtaxdeed.com on 12/01/2026 at 10:00 am, by Kevin C. Karnes, Lee County Clerk of the Circuit Court & Comptroller.

October 9, 16, 23, 30, 2026

26-04198L

SECOND INSERTION

NOTICE OF APPLICATION FOR TAX DEED
Section 197.512 F.S.

Tax Deed #:2026000694

NOTICE IS HEREBY GIVEN that Savvy FL LLC First Horizon Collateral Assignee the holder of the following certificate(s) has filed said certificate(s) for a tax deed to be issued thereon. The certificate number(s), year(s) of issuance, the description of the property and the name(s) in which it was assessed are as follows:

Certificate Number: 24-09768 Year of Issuance 2024 Description of Property THE SOUTH HALF (S1/2) OF THE SOUTHWEST QUARTER (SW 1/4) OF THE NORTHEAST QUARTER (NE 1/4) OF THE NORTHEAST QUARTER (NE 1/4) OF THE NORTHEAST QUARTER (NE 1/4) OF THE SOUTHEAST QUARTER (SE 1/4) OF SECTION 14, TOWNSHIP 43 SOUTH, RANGE 25 EAST, LEE COUNTY, FLORIDA. Strap Number 14-43-25-00-00008.0400

Names in which assessed: MEGAN ELLSWICK, PAMELA DEES

All of said property being in the County of Lee, State of Florida. Unless such certificate(s) shall be redeemed according to the law the property described in such certificate(s) will be sold to the highest bidder online at www.lee.realtaxdeed.com on 12/01/2026 at 10:00 am, by Kevin C. Karnes, Lee County Clerk of the Circuit Court & Comptroller.

October 9, 16, 23, 30, 2026

26-04182L

SECOND INSERTION

NOTICE OF APPLICATION FOR TAX DEED
Section 197.512 F.S.

Tax Deed #:2026000662

NOTICE IS HEREBY GIVEN that Savvy FL LLC First Horizon Collateral Assignee the holder of the following certificate(s) has filed said certificate(s) for a tax deed to be issued thereon. The certificate number(s), year(s) of issuance, the description of the property and the name(s) in which it was assessed are as follows:

Certificate Number: 24-13750 Year of Issuance 2024 Description of Property LOT 2, BLOCK 64, UNIT 7, SECTION 12, TOWNSHIP 44 SOUTH. RANGE 26 EAST, LEHIGH ACRES, ACCORDING TO THE MAP OR PLAT THEREOF ON FILE IN THE OFFICE OF THE CLERK OF THE CIRCUIT COURT, RECORDED IN PLAT BOOK 15, PAGE 61, PUBLIC RECORDS, LEE COUNTY, FLORIDA. Strap Number 12-44-26-07-00064.0020

Names in which assessed: JONES FAMILY TRUST, THE JONES FAMILY REVOCABLE LIVING TRUST, UAD,

All of said property being in the County of Lee, State of Florida. Unless such certificate(s) shall be redeemed according to the law the property described in such certificate(s) will be sold to the highest bidder online at www.lee.realtaxdeed.com on 12/01/2026 at 10:00 am, by Kevin C. Karnes, Lee County Clerk of the Circuit Court & Comptroller.

October 9, 16, 23, 30, 2026

26-04200L

SECOND INSERTION

NOTICE OF APPLICATION FOR TAX DEED
Section 197.512 F.S.

Tax Deed #:2026000613

NOTICE IS HEREBY GIVEN that Savvy FL LLC First Horizon Collateral Assignee the holder of the following certificate(s) has filed said certificate(s) for a tax deed to be issued thereon. The certificate number(s), year(s) of issuance, the description of the property and the name(s) in which it was assessed are as follows:

Certificate Number: 24-23808 Year of Issuance 2024 Description of Property LOT 6, BLOCK 63, UNIT 11, SECTION 21, TOWNSHIP 45 SOUTH, RANGE 27 EAST, LEHIGH ACRES, FLORIDA, ACCORDING TO THE MAP OR PLAT THEREOF ON FILE IN THE OFFICE OF THE CLERK OF THE CIRCUIT COURT, RECORDED IN PLAT BOOK 18, PAGE 64, PUBLIC RECORDS, LEE COUNTY, FLORIDA. Strap Number 21-45-27-11-00063.0060

Names in which assessed: CAMERON DRAPER, ESTATE OF SAMUEL U WALTON SR, MICHAELYN DRAPER, SAMUEL U. WALTON SR.

All of said property being in the County of Lee, State of Florida. Unless such certificate(s) shall be redeemed according to the law the property described in such certificate(s) will be sold to the highest bidder online at www.lee.realtaxdeed.com on 12/01/2026 at 10:00 am, by Kevin C. Karnes, Lee County Clerk of the Circuit Court & Comptroller.

October 9, 16, 23, 30, 2026

26-04223L

SECOND INSERTION

NOTICE OF APPLICATION FOR TAX DEED
Section 197.512 F.S.

Tax Deed #:2026000711

NOTICE IS HEREBY GIVEN that Savvy FL LLC First Horizon Collateral Assignee the holder of the following certificate(s) has filed said certificate(s) for a tax deed to be issued thereon. The certificate number(s), year(s) of issuance, the description of the property and the name(s) in which it was assessed are as follows:

Certificate Number: 24-08679 Year of Issuance 2024 Description of Property UNIT 602 OF ARIEL CONDOMINIUM OF THE LANDINGS, A CONDOMINIUM ACCORDING TO THE DECLARATION OF CONDOMINIUM THEREOF, RECORDED IN OFFICIAL RECORDS BOOK 1644, PAGE(S) 242, OF THE PUBLIC RECORDS OF LEE COUNTY, FLORIDA, AND ANY AMENDMENTS THERETO, TOGETHER WITH ITS UNDIVIDED SHARE IN THE COMMON ELEMENTS. Strap Number 20-45-24-27-00000.0602

Names in which assessed: CYNTHIA DORAGH, CYNTHIA L DORAGH

All of said property being in the County of Lee, State of Florida. Unless such certificate(s) shall be redeemed according to the law the property described in such certificate(s) will be sold to the highest bidder online at www.lee.realtaxdeed.com on 12/01/2026 at 10:00 am, by Kevin C. Karnes, Lee County Clerk of the Circuit Court & Comptroller.

October 9, 16, 23, 30, 2026

26-04176L

SECOND INSERTION

NOTICE OF APPLICATION FOR TAX DEED
Section 197.512 F.S.

Tax Deed #:2026000681

NOTICE IS HEREBY GIVEN that Savvy FL LLC First Horizon Collateral Assignee the holder of the following certificate(s) has filed said certificate(s) for a tax deed to be issued thereon. The certificate number(s), year(s) of issuance, the description of the property and the name(s) in which it was assessed are as follows:

Certificate Number: 24-05101 Year of Issuance 2024 Description of Property CONDOMINIUM UNIT 466, SANIBEL HARBOUR YACHT CLUB, A CONDOMINIUM, TOGETHER WITH AN UNDIVIDED INTEREST IN THE COMMON ELEMENTS, ACCORDING TO THE DECLARATION OF CONDOMINIUM THEREOF RECORDED BY INSTRUMENT NO. 2006000142556, AS AMENDED FROM TIME TO TIME, OF THE PUBLIC RECORDS OF LEE COUNTY, FLORIDA. Strap Number 09-46-23-07-00000.0466

Names in which assessed: BRADLEY J DOHACK, RYAN M SCHMIDT, RYAN SCHMIDT

All of said property being in the County of Lee, State of Florida. Unless such certificate(s) shall be redeemed according to the law the property described in such certificate(s) will be sold to the highest bidder online at www.lee.realtaxdeed.com on 12/01/2026 at 10:00 am, by Kevin C. Karnes, Lee County Clerk of the Circuit Court & Comptroller.

October 9, 16, 23, 30, 2026

26-04158L

SECOND INSERTION

NOTICE OF APPLICATION FOR TAX DEED
Section 197.512 F.S.

Tax Deed #:2026000830

NOTICE IS HEREBY GIVEN that ATCF II Florida-A LLC the holder of the following certificate(s) has filed said certificate(s) for a tax deed to be issued thereon. The certificate number(s), year(s) of issuance, the description of the property and the name(s) in which it was assessed are as follows:

Certificate Number: 24-21927 Year of Issuance 2024 Description of Property CONDOMINIUM UNIT 13, TRACT S, PINEWOOD CONDOMINIUM OF LEHIGH ACRES, ACCORDING TO THE DECLARATION OF CONDOMINIUM THEREOF RECORDED IN OFFICIAL RECORD BOOK 1012, PAGE 373, AND ALL AMENDMENTS THERETO, OF THE PUBLIC RECORDS OF LEE COUNTY, FLORIDA, TOGETHER WITH AN UNDIVIDED INTEREST IN THE COMMON ELEMENTS APPURTENANT THERETO. Strap Number 05-45-27-21-00200.0130

Names in which assessed: JON G PIPKIN, SANDRA E BLACK, SANDRA E PIPKIN

All of said property being in the County of Lee, State of Florida. Unless such certificate(s) shall be redeemed according to the law the property described in such certificate(s) will be sold to the highest bidder online at www.lee.realtaxdeed.com on 12/01/2026 at 10:00 am, by Kevin C. Karnes, Lee County Clerk of the Circuit Court & Comptroller.

October 9, 16, 23, 30, 2026

26-04229L

SECOND INSERTION

NOTICE OF APPLICATION FOR TAX DEED
Section 197.512 F.S.

Tax Deed #:2026000598

NOTICE IS HEREBY GIVEN that Savvy FL LLC First Horizon Collateral Assignee the holder of the following certificate(s) has filed said certificate(s) for a tax deed to be issued thereon. The certificate number(s), year(s) of issuance, the description of the property and the name(s) in which it was assessed are as follows:

Certificate Number: 24-16098 Year of Issuance 2024 Description of Property LOT 9, BLOCK 14, UNIT 2, SECTION 3, TOWNSHIP 45 SOUTH, RANGE 26 EAST, LEHIGH ACRES, FLORIDA, ACCORDING TO THE MAP OR PLAT THEREOF ON FILE IN THE OFFICE OF THE CLERK OF THE CIRCUIT COURT, RECORDED IN PLAT BOOK 15, PAGE 95, PUBLIC RECORDS, LEE COUNTY, FLORIDA. Strap Number 03-45-26-02-00014.0090

Names in which assessed: SHERYL LANELL DOYLE STOHS, SHERYL M. DOYLE, Sheryl Stohs

All of said property being in the County of Lee, State of Florida. Unless such certificate(s) shall be redeemed according to the law the property described in such certificate(s) will be sold to the highest bidder online at www.lee.realtaxdeed.com on 12/01/2026 at 10:00 am, by Kevin C. Karnes, Lee County Clerk of the Circuit Court & Comptroller.

October 9, 16, 23, 30, 2026

26-04204L

SECOND INSERTION

NOTICE OF APPLICATION FOR TAX DEED
Section 197.512 F.S.

Tax Deed #:2026000703

NOTICE IS HEREBY GIVEN that Savvy FL LLC First Horizon Collateral Assignee the holder of the following certificate(s) has filed said certificate(s) for a tax deed to be issued thereon. The certificate number(s), year(s) of issuance, the description of the property and the name(s) in which it was assessed are as follows:

Certificate Number: 24-11736 Year of Issuance 2024 Description of Property LEASEHOLD INTEREST IN: LOT 139, COACH LIGHT MANOR MOBILE HOME PARK, UPON THAT REAL PROPERTY MORE PARTICULARLY DESCRIBED IN DEED RECORDED IN O.R. BOOK 1555, PAGE 2264, PUBLIC RECORDS OF LEE COUNTY, FLORIDA. Strap Number 18-46-25-01-00000.1390

Names in which assessed: WILLIAM J. RAASCH REVOCABLE TRUST DATED 10TH DAY OF JANUARY 2022, WILLIAM JOHN RAASCH, William Raasch

All of said property being in the County of Lee, State of Florida. Unless such certificate(s) shall be redeemed according to the law the property described in such certificate(s) will be sold to the highest bidder online at www.lee.realtaxdeed.com on 12/01/2026 at 10:00 am, by Kevin C. Karnes, Lee County Clerk of the Circuit Court & Comptroller.

October 9, 16, 23, 30, 2026

26-04190L

--- TAX DEEDS ---

SECOND INSERTION

NOTICE OF APPLICATION FOR TAX DEED
Section 197.512 F.S.

Tax Deed #:2026000825

NOTICE IS HEREBY GIVEN that ATCF II Florida-A LLC the holder of the following certificate(s) has filed said certificate(s) for a tax deed to be issued thereon. The certificate number(s), year(s) of issuance, the description of the property and the name(s) in which it was assessed are as follows:

Certificate Number: 24-10103 Year of Issuance 2024 Description of Property LOTS 361 AND 362, BLOCK 9, RUSSELL PARK, ACCORDING TO THE PLAT THEREOF AS RECORDED IN PLAT BOOK 6, PAGE 12, OF THE PUBLIC RECORDS OF LEE COUNTY, FLORIDA. Strap Number 04-44-25-03-00009.3610

Names in which assessed: ELVIA DE PAZ PUEBLA

All of said property being in the County of Lee, State of Florida. Unless such certificate(s) shall be redeemed according to the law the property described in such certificate(s) will be sold to the highest bidder online at www.lee.realtaxdeed.com on 12/01/2026 at 10:00 am, by Kevin C. Karnes, Lee County Clerk of the Circuit Court & Comptroller.

October 9, 16, 23, 30, 2026

26-04238L

SECOND INSERTION

NOTICE OF APPLICATION FOR TAX DEED
Section 197.512 F.S.

Tax Deed #:2026000705

NOTICE IS HEREBY GIVEN that Savvy FL LLC First Horizon Collateral Assignee the holder of the following certificate(s) has filed said certificate(s) for a tax deed to be issued thereon. The certificate number(s), year(s) of issuance, the description of the property and the name(s) in which it was assessed are as follows:

Certificate Number: 24-10801 Year of Issuance 2024 Description of Property LOTS 1, 2, 3, 4, 31 AND 32, BLOCK 2, LINCOLN PARK DIVISION OF FORT MYERS, FLORIDA, ACCORDING TO THE MAP OR PLAT THEREOF, RECORDED IN PLAT BOOK 3, PAGE 43 OF THE PUBLIC RECORDS OF LEE COUNTY, FLORIDA, LESS RIGHT OF WAY Strap Number 19-44-25-P1-00202.0010

Names in which assessed: MOUNT HERMON BAPTIST CHURCH OF FORT MYERS, FLORIDA, INC., MOUNT HERMON BAPTIST CHURCH OF FORT MYERS, INC., MOUNT HERMON MINISTRIES INC, MOUNT HERMON MINISTRIES, INC.

All of said property being in the County of Lee, State of Florida. Unless such certificate(s) shall be redeemed according to the law the property described in such certificate(s) will be sold to the highest bidder online at www.lee.realtaxdeed.com on 12/01/2026 at 10:00 am, by Kevin C. Karnes, Lee County Clerk of the Circuit Court & Comptroller.

October 9, 16, 23, 30, 2026

26-04185L

SECOND INSERTION

NOTICE OF APPLICATION FOR TAX DEED
Section 197.512 F.S.

Tax Deed #:2026000666

NOTICE IS HEREBY GIVEN that Savvy FL LLC First Horizon Collateral Assignee the holder of the following certificate(s) has filed said certificate(s) for a tax deed to be issued thereon. The certificate number(s), year(s) of issuance, the description of the property and the name(s) in which it was assessed are as follows:

Certificate Number: 24-04997 Year of Issuance 2024 Description of Property LEASEHOLD INTEREST IN: UNIT 106 PLANTATION ESTATES MOBILE PARK, A COOPERATIVE, ACCORDING TO THE LEASE AGREEMENT AND PLAT PLAN ATTACHED TO PROSPECTUS RECORDED IN O.R. BOOK 3614, PAGE 4036, RE-RECORDED IN INSTRUMENT #2006000447322 OF THE PUBLIC RECORDS OF LEE COUNTY, FLORIDA. Strap Number 01-46-23-02-00000.1060

Names in which assessed: BUDGET CONSTRUCTION MANAGEMENT, BUDGET CONSTRUCTION MANAGEMENT SERVICES LLC

All of said property being in the County of Lee, State of Florida. Unless such certificate(s) shall be redeemed according to the law the property described in such certificate(s) will be sold to the highest bidder online at www.lee.realtaxdeed.com on 12/01/2026 at 10:00 am, by Kevin C. Karnes, Lee County Clerk of the Circuit Court & Comptroller.

October 9, 16, 23, 30, 2026

26-04156L

SECOND INSERTION

NOTICE OF APPLICATION FOR TAX DEED
Section 197.512 F.S.

Tax Deed #:2026000642

NOTICE IS HEREBY GIVEN that Savvy FL LLC First Horizon Collateral Assignee the holder of the following certificate(s) has filed said certificate(s) for a tax deed to be issued thereon. The certificate number(s), year(s) of issuance, the description of the property and the name(s) in which it was assessed are as follows:

Certificate Number: 24-00594 Year of Issuance 2024 Description of Property LOT 28, BLOCK 23: BEGIN AT A POINT 855.00 FEET EASTERLY FROM THE WEST LINE OF SAID BLOCK 23, 334.00 FEET SOUTHERLY FROM THE NORTH LINE THEREOF, THENCE RUN N. 86 DEGREES 45'16" E., 120.00 FEET, THENCE S. 1 DEGREE 44'33" W., 167.00 FEET, THENCE S. 86 DEGREES 45'16" W., 120.00 FEET, THENCE N. 1 DEGREE 44'33" E., 167.00 FEET TO THE POINT OF BEGINNING, SAID LAND BEING A PART OF A RE-SUBDIVISION OF LOTS 1 & 2, BLOCK 23, KREAMER'S AVOCADO SUBDIVISION IN SECTION 5, TOWNSHIP 44 SOUTH, RANGE 22 EAST, AS RECORDED IN PLAT BOOK 5, PAGE 21, OF THE PUBLIC RECORDS OF LEE COUNTY, FLORIDA. Strap Number 05-44-22-01-00023.0390

Names in which assessed: DONNA HENRY

All of said property being in the County of Lee, State of Florida. Unless such certificate(s) shall be redeemed according to the law the property described in such certificate(s) will be sold to the highest bidder online at www.lee.realtaxdeed.com on 12/01/2026 at 10:00 am, by Kevin C. Karnes, Lee County Clerk of the Circuit Court & Comptroller.

October 9, 16, 23, 30, 2026

26-04152L

SECOND INSERTION

NOTICE OF APPLICATION FOR TAX DEED
Section 197.512 F.S.

Tax Deed #:2026000792

NOTICE IS HEREBY GIVEN that Kivi LLC Ocean Bank the holder of the following certificate(s) has filed said certificate(s) for a tax deed to be issued thereon. The certificate number(s), year(s) of issuance, the description of the property and the name(s) in which it was assessed are as follows:

Certificate Number: 24-05041 Year of Issuance 2024 Description of Property ALL THAT CERTAIN PARCEL OF LAND SITUATE IN THE COUNTY OF LEE, STATE OF FLORIDA, BEING KNOWN AND DESIGNATED AS A TRACT OR PARCEL OF LAND LYING IN THE SOUTHEAST 1/4 OF THE SOUTHEAST 1/4 OF SECTION 2, TOWNSHIP 46 SOUTH, RANGE 23 EAST, WHICH TRACT OR PARCEL IS DESCRIBED AS FOLLOWS: FROM THE SOUTHWEST CORNER OF SAID FRACTION OF A SECTION, RUN NORTH 01°00'10" WEST ALONG THE WEST LINE OF SAID FRACTION OF A SECTION LINE (THE WESTERLY LINE OF BLOCK G OF COTTAGE POINT ACCORDING TO A PLAT OR MAP THEREOF, RECORDED IN PLAT BOOK 9, AT PAGE 133, PUBLIC RECORDS OF LEE COUNTY, FLORIDA) FOR 991.03 FEET TO A CONCRETE MONUMENT MARKING THE INTERSECTION WITH THE SOUTHWESTERLY LINE OF LANDS CONVEYED BY DEED RECORDED IN OFFICIAL RECORDS BOOK 1455, PAGES 230 AND 231, OF SAID PUBLIC RECORDS; THENCE RUN SOUTH 61°48'50" EAST, ALONG SAID SOUTHWESTERLY LINE FROM 500.01 FEET TO THE POINT OF BEGINNING; THENCE CONTINUE SOUTH 61°48'50" EAST FOR 218 FEET; THENCE NORTH 28°11'10" EAST 199.89 FEET; THENCE NORTH 61°48'50" WEST FOR 218 FEET; THENCE SOUTH 28°11'10" WEST 199.89 FEET TO THE POINT OF BEGINNING Strap Number 02-46-23-00-00010.0030

Names in which assessed: LOLA MAGNOLIA LLC

All of said property being in the County of Lee, State of Florida. Unless such certificate(s) shall be redeemed according to the law the property described in such certificate(s) will be sold to the highest bidder online at www.lee.realtaxdeed.com on 12/01/2026 at 10:00 am, by Kevin C. Karnes, Lee County Clerk of the Circuit Court & Comptroller.

October 9, 16, 23, 30, 2026

26-04157L

SECOND INSERTION

NOTICE OF APPLICATION FOR TAX DEED
Section 197.512 F.S.

Tax Deed #:2026000828

NOTICE IS HEREBY GIVEN that ATCF II Florida-A LLC the holder of the following certificate(s) has filed said certificate(s) for a tax deed to be issued thereon. The certificate number(s), year(s) of issuance, the description of the property and the name(s) in which it was assessed are as follows:

Certificate Number: 24-00076 Year of Issuance 2024 Description of Property BEGIN AT A CONCRETE POST ON THE SOUTH LINE OF GOVERNMENT LOT 1, SECTION 5-45-21, BEING 226 FEET MORE OR LESS EAST OF THE HIGH TIDE LINE OF THE GULF OF MEXICO; THENCE RUN S 81° 20' E 835.0 FEET ALONG THE SOUTH LINE OF SAID GOVERNMENT LOT 1 TO A CONCRETE POST, THENCE N 8° 40' E 205 FEET TO A CONCRETE POST; THENCE N 8° 40' E 945 FEET; THENCE S 81° 20' E 460 FEET TO THE POINT OF BEGINNING. THENCE S 8° 40' W 105 FEET; N 81° 20' W 100 FEET; N 8° 40' E 105 FEET; S 81° 20' E 100 FEET TO THE POINT OF BEGINNING. BEING LOT 2, UNIT 5, OF AN UNRECORDED SUBDIVISION KNOWN AS "JOSE'S HIDEAWAY," LOCATED IN GOVERNMENT LOT 1, SECTION 5-45-21. UPPER CAPTIVA ISLAND, LEE COUNTY, FLORIDA. Strap Number 05-45-21-13-00000.0020

Names in which assessed: Kerry Sepe, WILLIAM SEPE

All of said property being in the County of Lee, State of Florida. Unless such certificate(s) shall be redeemed according to the law the property described in such certificate(s) will be sold to the highest bidder online at www.lee.realtaxdeed.com on 12/01/2026 at 10:00 am, by Kevin C. Karnes, Lee County Clerk of the Circuit Court & Comptroller.

October 9, 16, 23, 30, 2026

26-04227L

SECOND INSERTION

NOTICE OF APPLICATION FOR TAX DEED
Section 197.512 F.S.

Tax Deed #:2026000668

NOTICE IS HEREBY GIVEN that Savvy FL LLC First Horizon Collateral Assignee the holder of the following certificate(s) has filed said certificate(s) for a tax deed to be issued thereon. The certificate number(s), year(s) of issuance, the description of the property and the name(s) in which it was assessed are as follows:

Certificate Number: 24-10019 Year of Issuance 2024 Description of Property A LOT OR PARCEL OF LAND LYING IN LOT 3, BLOCK 3, OF TERRY, TICE AND VANDAWALKER SUBDIVISION ACCORDING TO PLAT RECORDED IN PLAT BOOK 1 AT PAGE 46 OF THE PUBLIC RECORDS OF LEE COUNTY, WHICH LOT OR PARCEL IS DESCRIBED AS FOLLOWS: FROM THE NORTHWEST CORNER OF SAID LOT 3. RUN N 89 DEGREES 37 MINUTES 10 SECONDS E ALONG THE NORTH LINE OF SAID LOT FOR 190 FEET; THENCE RUN SOUTH, PARALLEL WITH THE WEST LINE OF SAID LOT FOR 316.0 FEET TO THE POINT OF BEGINNING. FROM SAID POINT OF BEGINNING CONTINUE SOUTH, PARALLEL WITH SAID WEST LINE OF LOT 3, ALONG THE EASTERLY LINE OF A ROADWAY EASEMENT 50 FEET WIDE FOR 60.0 FEET; THENCE RUN N. 89 DEGREES 37 MINUTES 10 SECONDS E., PARALLEL WITH THE NORTH LINE OF SAID LOT 3 FOR 140.69 FEET TO A POINT ON THE EAST LINE OF SAID LOT; THENCE RUN N.0 DEGREES 01 MINUTES 20 SECONDS E. ALONG SAID EAST LINE FOR 60.0 FEET; THENCE RUN S. 89 DEGREES 37 MINUTES 10 SECONDS W. PARALLEL WITH SAID NORTH LINE TO THE POINT OF BEGINNING. Strap Number 03-44-25-01-00043.0210

Names in which assessed: ESTATE OF VERONA A EVANS, ROBERT W EVANS, VERONA A EVANS

All of said property being in the County of Lee, State of Florida. Unless such certificate(s) shall be redeemed according to the law the property described in such certificate(s) will be sold to the highest bidder online at www.lee.realtaxdeed.com on 12/01/2026 at 10:00 am, by Kevin C. Karnes, Lee County Clerk of the Circuit Court & Comptroller.

October 9, 16, 23, 30, 2026

26-04183L

SECOND INSERTION

NOTICE OF APPLICATION FOR TAX DEED
Section 197.512 F.S.

Tax Deed #:2026000725

NOTICE IS HEREBY GIVEN that Savvy FL LLC First Horizon Collateral Assignee the holder of the following certificate(s) has filed said certificate(s) for a tax deed to be issued thereon. The certificate number(s), year(s) of issuance, the description of the property and the name(s) in which it was assessed are as follows:

Certificate Number: 24-09668 Year of Issuance 2024 Description of Property UNIT 205-E, THE SEASCAPE CONDOMINIUM, PHASE III, A CONDOMINIUM, ACCORDING TO THE DECLARATION OF CONDOMINIUM IN OFFICIAL RECORDS BOOK 1279, PAGES 983 THROUGH 1035, INCLUSIVE, PUBLIC RECORDS OF LEE COUNTY, FLORIDA, TOGETHER WITH ALL APPURTENANCES THEREUNTO APPERTAINING AND SPECIFIED IN SAID CONDOMINIUM DECLARATION, AS MAY BE AMENDED Strap Number 24-47-24-B4-0340E.2050

Names in which assessed: Richard Perry, RICHARD PERRY LIVING TRUST DATED AUGUST 12, 2008 RICHARD PERRY, RICHARD PERRY TRUST

All of said property being in the County of Lee, State of Florida. Unless such certificate(s) shall be redeemed according to the law the property described in such certificate(s) will be sold to the highest bidder online at www.lee.realtaxdeed.com on 12/01/2026 at 10:00 am, by Kevin C. Karnes, Lee County Clerk of the Circuit Court & Comptroller.

October 9, 16, 23, 30, 2026

26-04180L

SECOND INSERTION

NOTICE OF APPLICATION FOR TAX DEED
Section 197.512 F.S.

Tax Deed #:2026000715

NOTICE IS HEREBY GIVEN that Savvy FL LLC First Horizon Collateral Assignee the holder of the following certificate(s) has filed said certificate(s) for a tax deed to be issued thereon. The certificate number(s), year(s) of issuance, the description of the property and the name(s) in which it was assessed are as follows:

Certificate Number: 24-08716 Year of Issuance 2024 Description of Property UNIT 806, BUILDING 8, OF SOUTH POINTE WEST CONDOMINIUM, A CONDOMINIUM, ACCORDING TO THE DECLARATION OF CONDOMINIUM THEREOF RECORDED IN OFFICIAL RECORDS BOOK 1634, PAGE 1240, OFFICIAL RECORDS BOOK 1637, PAGE 268, OFFICIAL RECORDS BOOK 1641, PAGE 530, OFFICIAL RECORDS BOOK 1647, PAGE 875, OFFICIAL RECORDS BOOK 1650, PAGE 3738, OFFICIAL RECORDS BOOK 1650, PAGE 3780 OFFICIAL RECORDS BOOK 1658, PAGE 3335, OFFICIAL RECORDS BOOK 1685, PAGE 2042, OFFICIAL RECORDS BOOK 1685, PAGE 4635, OFFICIAL RECORDS BOOK 1695, PAGE 3584 AND OFFICIAL RECORDS BOOK 1700, PAGE 226, ALL OF THE PUBLIC RECORDS OF LEE COUNTY, FLORIDA, AND ANY AMENDMENTS THERETO, TOGETHER WITH ITS UNDIVIDED SHARE IN THE COMMON ELEMENTS. Strap Number 21-45-24-32-00000.8060

Names in which assessed: BONNIE RUTH AHL, ESTATE OF BONNIE RUTH AHL

All of said property being in the County of Lee, State of Florida. Unless such certificate(s) shall be redeemed according to the law the property described in such certificate(s) will be sold to the highest bidder online at www.lee.realtaxdeed.com on 12/01/2026 at 10:00 am, by Kevin C. Karnes, Lee County Clerk of the Circuit Court & Comptroller.

October 9, 16, 23, 30, 2026

26-04177L

SECOND INSERTION

NOTICE OF APPLICATION FOR TAX DEED
Section 197.512 F.S.

Tax Deed #:2026000676

NOTICE IS HEREBY GIVEN that Savvy FL LLC First Horizon Collateral Assignee the holder of the following certificate(s) has filed said certificate(s) for a tax deed to be issued thereon. The certificate number(s), year(s) of issuance, the description of the property and the name(s) in which it was assessed are as follows:

Certificate Number: 24-09261 Year of Issuance 2024 Description of Property LOT 47, BLOCK W, BAYSIDE ESTATES MOBILE HOME SUBDIVISION UNIT NO. 1, ACCORDING TO THE PLAT THEREOF, RECORDED IN PLAT BOOK 25, PAGES 22 THROUGH 24, OF THE PUBLIC RECORDS OF LEE COUNTY, FLORIDA. TOGETHER WITH THAT CERTAIN 1972 GREEN BOAT MANUFACTURED HOME THAT IS PERMANENTLY AFFIXED THERETO AND MADE A PART THEREOF, BEING TAXED AS REAL PROPERTY: IDENTIFICATION NUMBER GF309F, TITLE NUMBER 4958553 Strap Number 07-46-24-02-00W00.0470

Names in which assessed: JAMES W PERRY

All of said property being in the County of Lee, State of Florida. Unless such certificate(s) shall be redeemed according to the law the property described in such certificate(s) will be sold to the highest bidder online at www.lee.realtaxdeed.com on 12/01/2026 at 10:00 am, by Kevin C. Karnes, Lee County Clerk of the Circuit Court & Comptroller.

October 9, 16, 23, 30, 2026

26-04178L

SECOND INSERTION

NOTICE OF APPLICATION FOR TAX DEED
Section 197.512 F.S.

Tax Deed #:2026000692

NOTICE IS HEREBY GIVEN that Savvy FL LLC First Horizon Collateral Assignee the holder of the following certificate(s) has filed said certificate(s) for a tax deed to be issued thereon. The certificate number(s), year(s) of issuance, the description of the property and the name(s) in which it was assessed are as follows:

Certificate Number: 24-25462 Year of Issuance 2024 Description of Property COMMENCING AT A CONCRETE MONUMENT, THE WEST 1/4 CORNER OF SECTION 13, TOWNSHIP 46 SOUTH, RANGE 27 EAST, LEE COUNTY, FLORIDA, RUN NORTH 00° 13' 15 " EAST ON THE WEST LINE OF SECTION 13 FOR 300 FEET TO A STEEL STAKE; THENCE NORTH 89°07' 35" EAST ON THE CENTERLINE OF A 60 FOOT WIDE EASEMENT 621.58 FEET TO A STEEL STAKE, THE POINT OF BEGINNING; THENCE CONTINUE NORTH 89° 07' 35 " EAST 310.79 FEET TO A STEEL STAKE; THENCE SOUTH 00° 13' 15" WEST 1140.68 FEET TO A STEEL STAKE; THENCE CONTINUE SOUTH 00° 13' 15" WEST 300 FEET TO A STEEL STAKE; THENCE SOUTH 89° 00' 10" WEST 310.79 FEET TO A STEEL STAKE; THENCE NORTH 00° 13' 15" EAST 1440.68 FEET TO A STEEL STAKE, THE POINT OF BEGINNING. (A/K/A LOT 12, WILDCAT FARMS, UNRECORDED) Strap Number 13-46-27-00-00013.0000

Names in which assessed: BRACKEN HARBOR, LLC

All of said property being in the County of Lee, State of Florida. Unless such certificate(s) shall be redeemed according to the law the property described in such certificate(s) will be sold to the highest bidder online at www.lee.realtaxdeed.com on 12/01/2026 at 10:00 am, by Kevin C. Karnes, Lee County Clerk of the Circuit Court & Comptroller.

October 9, 16, 23, 30, 2026

26-04226L

SECOND INSERTION

NOTICE OF APPLICATION FOR TAX DEED
Section 197.512 F.S.

Tax Deed #:2026000702

NOTICE IS HEREBY GIVEN that Savvy FL LLC First Horizon Collateral Assignee the holder of the following certificate(s) has filed said certificate(s) for a tax deed to be issued thereon. The certificate number(s), year(s) of issuance, the description of the property and the name(s) in which it was assessed are as follows:

Certificate Number: 24-08593 Year of Issuance 2024 Description of Property MARINA SLIP NO. 8, RIVERSIDE YACHT CLUB ESTATES, AS SHOWN IN PLAT BOOK 47, PAGES 21 THROUGH 24, AND AS DESCRIBED IN THAT CERTAIN DECLARATION OF COVENANTS, RESTRICTIONS, EASEMENTS, CHARGES AND LIENS FOR RIVERSIDE YACHT CLUB ESTATES, AS RECORDED IN OFFICIAL RECORDS BOOK 2189, PAGE 2979, AS AMENDED, IN THE PUBLIC RECORDS OF LEE COUNTY, FLORIDA. Strap Number 17-45-24-02-00008.0000

Names in which assessed: David G Thompson, DAVID THOMPSON, KATHERINE THOMPSON

All of said property being in the County of Lee, State of Florida. Unless such certificate(s) shall be redeemed according to the law the property described in such certificate(s) will be sold to the highest bidder online at www.lee.realtaxdeed.com on 12/01/2026 at 10:00 am, by Kevin C. Karnes, Lee County Clerk of the Circuit Court & Comptroller.

October 9, 16, 23, 30, 2026

26-04175L

SECOND INSERTION

NOTICE OF APPLICATION FOR TAX DEED
Section 197.512 F.S.

Tax Deed #:2026000706

NOTICE IS HEREBY GIVEN that Savvy FL LLC First Horizon Collateral Assignee the holder of the following certificate(s) has filed said certificate(s) for a tax deed to be issued thereon. The certificate number(s), year(s) of issuance, the description of the property and the name(s) in which it was assessed are as follows:

Certificate Number: 24-10820 Year of Issuance 2024 Description of Property LOTS 1 THROUGH 10, 31 AND 32, BLOCK 12, LINCOLN PARK SUBDIVISION, ACCORDING TO THE PLAT THEREOF AS RECORDED IN PLAT BOOK 3, PAGE 43, OF THE PUBLIC RECORDS OF LEE COUNTY, FLORIDA. Strap Number 19-44-25-P1-00212.0010

Names in which assessed: MOUNT HERMAN BAPTIST CHURCH OF FORT MYERS, FLORIDA, INC., MOUNT HERMAN PRIMITIVE BAPTIST CHURCH OF FORT MYERS, FLORIDA, INC., MOUNT HERMAN PRIMITIVE BAPTIST CHURCH OF FORT MYERS, INC., MOUNT HERMON BAPTIST CHURCH OF FORT MYERS, FLORIDA, INC., MOUNT HERMON BAPTIST CHURCH OF FORT MYERS, INC., MOUNT HERMON MINISTRIES INC, MOUNT HERMON MINISTRIES, INC., MOUNT HERMON MINISTRIES, INC., F/K/A MOUNT HERMON CHURCH OF FORT MYERS, FLORIDA, INC.

All of said property being in the County of Lee, State of Florida. Unless such certificate(s) shall be redeemed according to the law the property described in such certificate(s) will be sold to the highest bidder online at www.lee.realtaxdeed.com on 12/01/2026 at 10:00 am, by Kevin C. Karnes, Lee County Clerk of the Circuit Court & Comptroller.

October 9, 16, 23, 30, 2026

26-04186L

PUBLISH YOUR LEGAL NOTICE

We publish all Public sale, Estate & Court-related notices

- Simply email your notice to legal@businessobserverfl.com
- We offer an online payment portal for easy credit card payment
- Service includes us e-filing your affidavit to the Clerk's office on your behalf

--- TAX DEEDS ---

SECOND INSERTION

NOTICE OF APPLICATION FOR TAX DEED
Section 197.512 F.S.

Tax Deed #:2026000755

NOTICE IS HEREBY GIVEN that Savvy FL LLC First Horizon Collateral Assignee the holder of the following certificate(s) has filed said certificate(s) for a tax deed to be issued thereon. The certificate number(s), year(s) of issuance, the description of the property and the name(s) in which it was assessed are as follows:

Certificate Number: 24-06266 Year of Issuance 2024 Description of Property LOTS 18 AND 19 BLOCK 2140 UNIT 32 CAPE CORAL ACCORDING TO PLAT THEREOF RECORDED IN PLAT BOOK 16, PAGES 1-13, OF THE PUBLIC RECORDS OF LEE COUNTY, FLORIDA Strap Number 31-43-24-C3-02140.0180

Names in which assessed: ELAINE P WILLIAMS

All of said property being in the County of Lee, State of Florida. Unless such certificate(s) shall be redeemed according to the law the property described in such certificate(s) will be sold to the highest bidder online at www.lee.realtaxdeed.com on 12/01/2026 at 10:00 am, by Kevin C. Karnes, Lee County Clerk of the Circuit Court & Comptroller.

October 9, 16, 23, 30, 2026

26-04167L

SECOND INSERTION

NOTICE OF APPLICATION FOR TAX DEED
Section 197.512 F.S.

Tax Deed #:2026000741

NOTICE IS HEREBY GIVEN that Savvy FL LLC First Horizon Collateral Assignee the holder of the following certificate(s) has filed said certificate(s) for a tax deed to be issued thereon. The certificate number(s), year(s) of issuance, the description of the property and the name(s) in which it was assessed are as follows:

Certificate Number: 24-00788 Year of Issuance 2024 Description of Property LOT 6, BLOCK K, PINE ISLAND CENTER - UNIT 3, ACCORDING TO THE PLAT THEREOF, RECORDED IN PLAT BOOK 10, PAGES 108-110, OF THE PUBLIC RECORDS OF LEE COUNTY, FLORIDA. Strap Number 28-44-22-05-000K0.0060

Names in which assessed: TUAN HOANG LE TRAN

All of said property being in the County of Lee, State of Florida. Unless such certificate(s) shall be redeemed according to the law the property described in such certificate(s) will be sold to the highest bidder online at www.lee.realtaxdeed.com on 12/01/2026 at 10:00 am, by Kevin C. Karnes, Lee County Clerk of the Circuit Court & Comptroller.

October 9, 16, 23, 30, 2026

26-04153L

SECOND INSERTION

NOTICE OF APPLICATION FOR TAX DEED
Section 197.512 F.S.

Tax Deed #:2026000845

NOTICE IS HEREBY GIVEN that ATCF II Florida-A LLC the holder of the following certificate(s) has filed said certificate(s) for a tax deed to be issued thereon. The certificate number(s), year(s) of issuance, the description of the property and the name(s) in which it was assessed are as follows:

Certificate Number: 24-03207 Year of Issuance 2024 Description of Property LOTS 30 AND 31, BLOCK 3977, UNIT 55, CAPE CORAL, ACCORDING TO THE PLAT THEREOF RECORDED IN PLAT BOOK 19, PAGES 92-106, INCLUSIVE, OF THE PUBLIC RECORDS OF LEE COUNTY, FLORIDA. Strap Number 08-44-23-C3-03977.0300

Names in which assessed: TIMOTHY J MCGLYN

All of said property being in the County of Lee, State of Florida. Unless such certificate(s) shall be redeemed according to the law the property described in such certificate(s) will be sold to the highest bidder online at www.lee.realtaxdeed.com on 12/01/2026 at 10:00 am, by Kevin C. Karnes, Lee County Clerk of the Circuit Court & Comptroller.

October 9, 16, 23, 30, 2026

26-04145L

SECOND INSERTION

NOTICE OF APPLICATION FOR TAX DEED
Section 197.512 F.S.

Tax Deed #:2026000803

NOTICE IS HEREBY GIVEN that JAMON BOWEN the holder of the following certificate(s) has filed said certificate(s) for a tax deed to be issued thereon. The certificate number(s), year(s) of issuance, the description of the property and the name(s) in which it was assessed are as follows:

Certificate Number: 24-17074 Year of Issuance 2024 Description of Property LOT 2, BLOCK C, HUNTERS RIDGE, ACCORDING TO THE PLAT THEREOF, AS RECORDED IN PLAT BOOK 41, PAGES 1 THROUGH 13, INCLUSIVE, OF THE PUBLIC RECORDS OF LEE COUNTY, FLORIDA. Strap Number 06-48-26-B3-0010C.0020

Names in which assessed: SUSAN HELLER

All of said property being in the County of Lee, State of Florida. Unless such certificate(s) shall be redeemed according to the law the property described in such certificate(s) will be sold to the highest bidder online at www.lee.realtaxdeed.com on 12/01/2026 at 10:00 am, by Kevin C. Karnes, Lee County Clerk of the Circuit Court & Comptroller.

October 9, 16, 23, 30, 2026

26-04142L

SECOND INSERTION

NOTICE OF APPLICATION FOR TAX DEED
Section 197.512 F.S.

Tax Deed #:2026000747

NOTICE IS HEREBY GIVEN that Savvy FL LLC First Horizon Collateral Assignee the holder of the following certificate(s) has filed said certificate(s) for a tax deed to be issued thereon. The certificate number(s), year(s) of issuance, the description of the property and the name(s) in which it was assessed are as follows:

Certificate Number: 24-15037 Year of Issuance 2024 Description of Property LOT 8, BLOCK 29, UNIT 4, SECTION 29, TOWNSHIP 44 SOUTH, RANGE 26 EAST, LEHIGH ACRES AS RECORDED IN PLAT BOOK 15, PAGE 80, PUBLIC RECORDS OF LEE COUNTY, FLORIDA. Strap Number 29-44-26-04-00029.0080

Names in which assessed: CONNIE PENNINGTON

All of said property being in the County of Lee, State of Florida. Unless such certificate(s) shall be redeemed according to the law the property described in such certificate(s) will be sold to the highest bidder online at www.lee.realtaxdeed.com on 12/01/2026 at 10:00 am, by Kevin C. Karnes, Lee County Clerk of the Circuit Court & Comptroller.

October 9, 16, 23, 30, 2026

26-04203L

SECOND INSERTION

NOTICE OF APPLICATION FOR TAX DEED
Section 197.512 F.S.

Tax Deed #:2026000609

NOTICE IS HEREBY GIVEN that Savvy FL LLC First Horizon Collateral Assignee the holder of the following certificate(s) has filed said certificate(s) for a tax deed to be issued thereon. The certificate number(s), year(s) of issuance, the description of the property and the name(s) in which it was assessed are as follows:

Certificate Number: 24-10914 Year of Issuance 2024 Description of Property LOT 12, BLOCK I, CARVER PARK, ACCORDING TO THE MAP OR PLAT THEREOF AS RECORDED IN PLAT BOOK 8, PAGE 87, PUBLIC RECORDS OF LEE COUNTY, FLORIDA. Strap Number 19-44-25-P2-0050I.0120

Names in which assessed: JENNYFER PAOLA UZOR, ROBERT UZOR

All of said property being in the County of Lee, State of Florida. Unless such certificate(s) shall be redeemed according to the law the property described in such certificate(s) will be sold to the highest bidder online at www.lee.realtaxdeed.com on 12/01/2026 at 10:00 am, by Kevin C. Karnes, Lee County Clerk of the Circuit Court & Comptroller.

October 9, 16, 23, 30, 2026

26-04188L

SECOND INSERTION

NOTICE OF APPLICATION FOR TAX DEED
Section 197.512 F.S.

Tax Deed #:2026000795

NOTICE IS HEREBY GIVEN that Kivi LLC Ocean Bank the holder of the following certificate(s) has filed said certificate(s) for a tax deed to be issued thereon. The certificate number(s), year(s) of issuance, the description of the property and the name(s) in which it was assessed are as follows:

Certificate Number: 24-07290 Year of Issuance 2024 Description of Property LOTS 60, 61 AND 62, BLOCK 1354, UNIT 18, CAPE CORAL SUBDIVISION, ACCORDING TO THE PLAT THEREOF AS RECORDED IN PLAT BOOK 13, PAGES 96 TO 120, INCLUSIVE, IN THE PUBLIC RECORDS OF LEE COUNTY, FLORIDA Strap Number 17-44-24-C2-01354.0600

Names in which assessed: ANGELA DEMPSEY, BARBARA L PETERSON, BARBARA N PETERSON, REBECCA HAYES, ROGER A PETERSON

All of said property being in the County of Lee, State of Florida. Unless such certificate(s) shall be redeemed according to the law the property described in such certificate(s) will be sold to the highest bidder online at www.lee.realtaxdeed.com on 12/01/2026 at 10:00 am, by Kevin C. Karnes, Lee County Clerk of the Circuit Court & Comptroller.

October 9, 16, 23, 30, 2026

26-04172L

SECOND INSERTION

NOTICE OF APPLICATION FOR TAX DEED
Section 197.512 F.S.

Tax Deed #:2026000696

NOTICE IS HEREBY GIVEN that Savvy FL LLC First Horizon Collateral Assignee the holder of the following certificate(s) has filed said certificate(s) for a tax deed to be issued thereon. The certificate number(s), year(s) of issuance, the description of the property and the name(s) in which it was assessed are as follows:

Certificate Number: 24-07247 Year of Issuance 2024 Description of Property LOT 65, OF WATERWAY ESTATES OF FORT MYERS, BLOCK 1, UNIT 1, ACCORDING TO THE PLAT THEREOF, AS RECORDED IN PLAT BOOK 21, AT PAGES 2 AND 3, OF THE PUBLIC RECORDS OF LEE COUNTY, FLORIDA. Strap Number 16-44-24-06-00000.0650

Names in which assessed: ESTATE OF JASON TOLLAS, JASON TOLLAS, TURNKEY REALTY, LLC

All of said property being in the County of Lee, State of Florida. Unless such certificate(s) shall be redeemed according to the law the property described in such certificate(s) will be sold to the highest bidder online at www.lee.realtaxdeed.com on 12/01/2026 at 10:00 am, by Kevin C. Karnes, Lee County Clerk of the Circuit Court & Comptroller.

October 9, 16, 23, 30, 2026

26-04170L

SECOND INSERTION

NOTICE OF APPLICATION FOR TAX DEED
Section 197.512 F.S.

Tax Deed #:2026000704

NOTICE IS HEREBY GIVEN that Savvy FL LLC First Horizon Collateral Assignee the holder of the following certificate(s) has filed said certificate(s) for a tax deed to be issued thereon. The certificate number(s), year(s) of issuance, the description of the property and the name(s) in which it was assessed are as follows:

Certificate Number: 24-05540 Year of Issuance 2024 Description of Property LOTS 7 AND 8, BLOCK 5589, UNIT 84, CAPE CORAL SUBDIVISION, ACCORDING TO THE PLAT THEREOF, RECORDED IN PLAT BOOK 24, PAGES 30 THROUGH 48, INCLUSIVE, OF THE PUBLIC RECORDS OF LEE COUNTY, FLORIDA. Strap Number 19-43-24-C2-05589.0070

Names in which assessed: AUDLEY ATKINSON, NATALIE ATKINSON

All of said property being in the County of Lee, State of Florida. Unless such certificate(s) shall be redeemed according to the law the property described in such certificate(s) will be sold to the highest bidder online at www.lee.realtaxdeed.com on 12/01/2026 at 10:00 am, by Kevin C. Karnes, Lee County Clerk of the Circuit Court & Comptroller.

October 9, 16, 23, 30, 2026

26-04161L

SECOND INSERTION

NOTICE OF APPLICATION FOR TAX DEED
Section 197.512 F.S.

Tax Deed #:2026000657

NOTICE IS HEREBY GIVEN that Savvy FL LLC First Horizon Collateral Assignee the holder of the following certificate(s) has filed said certificate(s) for a tax deed to be issued thereon. The certificate number(s), year(s) of issuance, the description of the property and the name(s) in which it was assessed are as follows:

Certificate Number: 24-01839 Year of Issuance 2024 Description of Property LOT(S) 51 AND 52, BLOCK 4287, CAPE CORAL UNIT 61, ACCORDING TO THE MAP OR PLAT THEREOF, AS RECORDED IN PLAT BOOK 21, PAGE(S) 4 THROUGH 20, INCLUSIVE, OF THE PUBLIC RECORDS OF LEE COUNTY, FLORIDA. Strap Number 31-43-23-C4-04287.0510

Names in which assessed: CAPRI HOMES LLC, CAPRI HOMES, LLC

All of said property being in the County of Lee, State of Florida. Unless such certificate(s) shall be redeemed according to the law the property described in such certificate(s) will be sold to the highest bidder online at www.lee.realtaxdeed.com on 12/01/2026 at 10:00 am, by Kevin C. Karnes, Lee County Clerk of the Circuit Court & Comptroller.

October 9, 16, 23, 30, 2026

26-04154L

SECOND INSERTION

NOTICE OF APPLICATION FOR TAX DEED
Section 197.512 F.S.

Tax Deed #:2026000852

NOTICE IS HEREBY GIVEN that ATCF II Florida-A LLC the holder of the following certificate(s) has filed said certificate(s) for a tax deed to be issued thereon. The certificate number(s), year(s) of issuance, the description of the property and the name(s) in which it was assessed are as follows:

Certificate Number: 24-11290 Year of Issuance 2024 Description of Property UNIT 5010, PASEO, A CONDOMINIUM ACCORDING TO THE DECLARATION OF CONDOMINIUM THEREOF RECORDED IN OFFICIAL RECORDS INSTRUMENT NO. 2007000131860, AND SUBSEQUENT AMENDMENTS THERETO, OF THE PUBLIC RECORDS OF LEE COUNTY, FLORIDA. Strap Number 09-45-25-P3-00200.5010

Names in which assessed: KYLE GILL

All of said property being in the County of Lee, State of Florida. Unless such certificate(s) shall be redeemed according to the law the property described in such certificate(s) will be sold to the highest bidder online at www.lee.realtaxdeed.com on 12/01/2026 at 10:00 am, by Kevin C. Karnes, Lee County Clerk of the Circuit Court & Comptroller.

October 9, 16, 23, 30, 2026

26-04148L

SECOND INSERTION

NOTICE OF APPLICATION FOR TAX DEED
Section 197.512 F.S.

Tax Deed #:2026000595

NOTICE IS HEREBY GIVEN that Savvy FL LLC First Horizon Collateral Assignee the holder of the following certificate(s) has filed said certificate(s) for a tax deed to be issued thereon. The certificate number(s), year(s) of issuance, the description of the property and the name(s) in which it was assessed are as follows:

Certificate Number: 24-10874 Year of Issuance 2024 Description of Property LOT 2, BLOCK 17, OF THAT CERTAIN SUBDIVISION KNOWN AS FRANKLIN PARK, ACCORDING TO THE MAP OR PLAT THEREOF RECORDED IN PLAT BOOK 4, PAGE 72, PUBLIC RECORDS OF LEE COUNTY, FLORIDA. Strap Number 19-44-25-P1-00317.0020

Names in which assessed: ESTATE OF HATTIE M LIVINGSTON, HATTIE M LIVINGSTON

All of said property being in the County of Lee, State of Florida. Unless such certificate(s) shall be redeemed according to the law the property described in such certificate(s) will be sold to the highest bidder online at www.lee.realtaxdeed.com on 12/01/2026 at 10:00 am, by Kevin C. Karnes, Lee County Clerk of the Circuit Court & Comptroller.

October 9, 16, 23, 30, 2026

26-04187L

SECOND INSERTION

NOTICE OF APPLICATION FOR TAX DEED
Section 197.512 F.S.

Tax Deed #:2026000640

NOTICE IS HEREBY GIVEN that Savvy FL LLC First Horizon Collateral Assignee the holder of the following certificate(s) has filed said certificate(s) for a tax deed to be issued thereon. The certificate number(s), year(s) of issuance, the description of the property and the name(s) in which it was assessed are as follows:

Certificate Number: 24-07044 Year of Issuance 2024 Description of Property LOT 37, OF TROPIC ISLES SUBDIVISION, SECTION 3, UNIT 2, ACCORDING TO THE PLAT THEREOF AS RECORDED IN PLAT BOOK 12, AT PAGE 89, OF THE PUBLIC RECORDS OF LEE COUNTY FLORIDA. Strap Number 09-44-24-06-00000.0370

Names in which assessed: E & Y ASSETS LLC, GENUINE INVESTMENTS LAND TRUST, GENUINE INVESTMENTS LAND TRUST DATED OCTOBER 25, 2021

All of said property being in the County of Lee, State of Florida. Unless such certificate(s) shall be redeemed according to the law the property described in such certificate(s) will be sold to the highest bidder online at www.lee.realtaxdeed.com on 12/01/2026 at 10:00 am, by Kevin C. Karnes, Lee County Clerk of the Circuit Court & Comptroller.

October 9, 16, 23, 30, 2026

26-04168L

SECOND INSERTION

NOTICE OF APPLICATION FOR TAX DEED
Section 197.512 F.S.

Tax Deed #:2026000619

NOTICE IS HEREBY GIVEN that Savvy FL LLC First Horizon Collateral Assignee the holder of the following certificate(s) has filed said certificate(s) for a tax deed to be issued thereon. The certificate number(s), year(s) of issuance, the description of the property and the name(s) in which it was assessed are as follows:

Certificate Number: 24-14181 Year of Issuance 2024 Description of Property LOT 14, BLOCK 5, UNIT 1, SECTION 20, TOWNSHIP 44 SOUTH, RANGE 26 EAST, LEHIGH ACRES, ACCORDING TO PLAT THEREOF AS RECORDED IN PLAT BOOK 26, PAGE 28, OF THE PUBLIC RECORDS OF LEE COUNTY, FLORIDA. Strap Number 20-44-26-01-00005.0140

Names in which assessed: TURTLEBACK HOME INVESTMENTS LL, TURTLEBACK HOME INVESTMENTS LLC

All of said property being in the County of Lee, State of Florida. Unless such certificate(s) shall be redeemed according to the law the property described in such certificate(s) will be sold to the highest bidder online at www.lee.realtaxdeed.com on 12/01/2026 at 10:00 am, by Kevin C. Karnes, Lee County Clerk of the Circuit Court & Comptroller.

October 9, 16, 23, 30, 2026

26-04202L

SECOND INSERTION

NOTICE OF APPLICATION FOR TAX DEED
Section 197.512 F.S.

Tax Deed #:2026000614

NOTICE IS HEREBY GIVEN that Savvy FL LLC First Horizon Collateral Assignee the holder of the following certificate(s) has filed said certificate(s) for a tax deed to be issued thereon. The certificate number(s), year(s) of issuance, the description of the property and the name(s) in which it was assessed are as follows:

Certificate Number: 24-14126 Year of Issuance 2024 Description of Property LOT 14, BLOCK 27, UNIT 5, REPLAT OF RESUBDIVISION OF BLOCK B, BUCKINGHAM PARK, NORTHWEST SECTION, IN SECTION 16, TOWNSHIP 44 SOUTH, RANGE 26 EAST, LEHIGH ACRES, ACCORDING TO THE PLAT THEREOF, RECORDED IN PLAT BOOK 27, PAGE 193, OF THE PUBLIC RECORDS OF LEE COUNTY, FLORIDA. Strap Number 16-44-26-08-00027.0140

Names in which assessed: HUAYING CHOU

All of said property being in the County of Lee, State of Florida. Unless such certificate(s) shall be redeemed according to the law the property described in such certificate(s) will be sold to the highest bidder online at www.lee.realtaxdeed.com on 12/01/2026 at 10:00 am, by Kevin C. Karnes, Lee County Clerk of the Circuit Court & Comptroller.

October 9, 16, 23, 30, 2026

26-04201L

SECOND INSERTION

NOTICE OF APPLICATION FOR TAX DEED
Section 197.512 F.S.

Tax Deed #:2026000643

NOTICE IS HEREBY GIVEN that Savvy FL LLC First Horizon Collateral Assignee the holder of the following certificate(s) has filed said certificate(s) for a tax deed to be issued thereon. The certificate number(s), year(s) of issuance, the description of the property and the name(s) in which it was assessed are as follows:

Certificate Number: 24-21982 Year of Issuance 2024 Description of Property LOT 18, BLOCK 7, ADDITION ONE TO LEHIGH ACRES, SECTION 6, TOWNSHIP 45 SOUTH, RANGE 27 EAST LEHIGH ACRES ACCORDING TO THE MAP OR PLAT THEREOF ON FILE IN THE OFFICE OF THE CLERK OF THE CIRCUIT COURT, RECORDED IN PLAT BOOK 12, PAGES 138, PUBLIC RECORDS. Strap Number 06-45-27-L2-01007.0180

Names in which assessed: ADOLFO SCHRADER, ESTATE OF HILDA SCHRADER

All of said property being in the County of Lee, State of Florida. Unless such certificate(s) shall be redeemed according to the law the property described in such certificate(s) will be sold to the highest bidder online at www.lee.realtaxdeed.com on 12/01/2026 at 10:00 am, by Kevin C. Karnes, Lee County Clerk of the Circuit Court & Comptroller.

October 9, 16, 23, 30, 2026

26-04221L

SECOND INSERTION

NOTICE OF APPLICATION FOR TAX DEED
Section 197.512 F.S.

Tax Deed #:2026000644

NOTICE IS HEREBY GIVEN that Savvy FL LLC First Horizon Collateral Assignee the holder of the following certificate(s) has filed said certificate(s) for a tax deed to be issued thereon. The certificate number(s), year(s) of issuance, the description of the property and the name(s) in which it was assessed are as follows:

Certificate Number: 24-20559 Year of Issuance 2024 Description of Property LOT 2, BLOCK 48, UNIT 12, SECTION 24, TOWNSHIP 44 SOUTH, RANGE 27 EAST, LEHIGH ACRES, ACCORDING TO THE MAP OR PLAT THEREOF ON FILE IN THE OFFICE OF THE CLERK OF THE CIRCUIT COURT, RECORDED IN PLAT BOOK 15, PAGE 35, PUBLIC RECORDS, LEE COUNTY, FLORIDA. Strap Number 24-44-27-12-00048.0020

Names in which assessed: GENEVA S KIPP, GENEVA SOPHIA KIPP

All of said property being in the County of Lee, State of Florida. Unless such certificate(s) shall be redeemed according to the law the property described in such certificate(s) will be sold to the highest bidder online at www.lee.realtaxdeed.com on 12/01/2026 at 10:00 am, by Kevin C. Karnes, Lee County Clerk of the Circuit Court & Comptroller.

October 9, 16, 23, 30, 2026

26-04219L

SECOND INSERTION

NOTICE OF APPLICATION FOR TAX DEED
Section 197.512 F.S.

Tax Deed #:2026000622

NOTICE IS HEREBY GIVEN that Savvy FL LLC First Horizon Collateral Assignee the holder of the following certificate(s) has filed said certificate(s) for a tax deed to be issued thereon. The certificate number(s), year(s) of issuance, the description of the property and the name(s) in which it was assessed are as follows:

Certificate Number: 24-20278 Year of Issuance 2024 Description of Property EAST HALF (1/2) OF LOT 13, BLOCK 17, UNIT 5, SECTION 22, TOWNSHIP 44 SOUTH, RANGE 27 EAST, LEHIGH ACRES, ACCORDING TO THE MAP OR PLAT THEREOF ON FILE IN THE OFFICE OF THE CLERK OF THE CIRCUIT COURT, RECORDED IN PLAT BOOK 15, PAGE 33, PUBLIC RECORDS OF LEE COUNTY, FLORIDA. Strap Number 22-44-27-05-00017.013A

Names in which assessed: LINNETT EBANKS

All of said property being in the County of Lee, State of Florida. Unless such certificate(s) shall be redeemed according to the law the property described in such certificate(s) will be sold to the highest bidder online at www.lee.realtaxdeed.com on 12/01/2026 at 10:00 am, by Kevin C. Karnes, Lee County Clerk of the Circuit Court & Comptroller.

October 9, 16, 23, 30, 2026

26-04215L

--- TAX DEEDS ---

SECOND INSERTION

NOTICE OF APPLICATION FOR TAX DEED
Section 197.512 F.S.

Tax Deed #:2026000599

NOTICE IS HEREBY GIVEN that Savvy FL LLC First Horizon Collateral Assignee the holder of the following certificate(s) has filed said certificate(s) for a tax deed to be issued thereon. The certificate number(s), year(s) of issuance, the description of the property and the name(s) in which it was assessed are as follows:

Certificate Number: 24-13352 Year of Issuance 2024 Description of Property LOT 8, BLOCK 12, UNIT 3 OF LEHIGH ACRES, SECTION 3, TOWNSHIP 44 SOUTH, RANGE 26 EAST, ACCORDING TO THE PLAT THEREOF AS RECORDED IN PLAT BOOK 26, PAGE 5, OF THE PUBLIC RECORDS OF LEE COUNTY, FLORIDA. Strap Number 03-44-26-03-00012.0080

Names in which assessed:
WILLIAM SAWYER

All of said property being in the County of Lee, State of Florida. Unless such certificate(s) shall be redeemed according to the law the property described in such certificate(s) will be sold to the highest bidder online at www.lee.realtaxdeed.com on 12/01/2026 at 10:00 am, by Kevin C. Karnes, Lee County Clerk of the Circuit Court & Comptroller.

October 9, 16, 23, 30, 2026
26-04197L

SECOND INSERTION

NOTICE OF APPLICATION FOR TAX DEED
Section 197.512 F.S.

Tax Deed #:2026000669

NOTICE IS HEREBY GIVEN that Savvy FL LLC First Horizon Collateral Assignee the holder of the following certificate(s) has filed said certificate(s) for a tax deed to be issued thereon. The certificate number(s), year(s) of issuance, the description of the property and the name(s) in which it was assessed are as follows:

Certificate Number: 24-13351 Year of Issuance 2024 Description of Property LOT 3, BLOCK 10, UNIT 2, SECTION 3, TOWNSHIP 44 SOUTH, RANGE 26 EAST, LEHIGH ACRES, ACCORDING TO THE MAP OR PLAT THEREOF, AS RECORDED IN PLAT BOOK 26, PAGE 4, OF THE PUBLIC RECORDS OF LEE COUNTY, FLORIDA. Strap Number 03-44-26-02-00010.0030

Names in which assessed:
WILLIAM SAWYER

All of said property being in the County of Lee, State of Florida. Unless such certificate(s) shall be redeemed according to the law the property described in such certificate(s) will be sold to the highest bidder online at www.lee.realtaxdeed.com on 12/01/2026 at 10:00 am, by Kevin C. Karnes, Lee County Clerk of the Circuit Court & Comptroller.

October 9, 16, 23, 30, 2026
26-04196L

SECOND INSERTION

NOTICE OF APPLICATION FOR TAX DEED
Section 197.512 F.S.

Tax Deed #:2026000667

NOTICE IS HEREBY GIVEN that Savvy FL LLC First Horizon Collateral Assignee the holder of the following certificate(s) has filed said certificate(s) for a tax deed to be issued thereon. The certificate number(s), year(s) of issuance, the description of the property and the name(s) in which it was assessed are as follows:

Certificate Number: 24-13246 Year of Issuance 2024 Description of Property LOT 9, BLOCK 69, UNIT 8, SECTION 2, TOWNSHIP 44 SOUTH, RANGE 26 EAST, LEHIGH ACRES, ACCORDING TO THE PLAT THEREOF AS RECORDED IN PLAT BOOK 15, PAGE 59, PUBLIC RECORDS OF LEE COUNTY, FLORIDA. Strap Number 02-44-26-08-00069.0090

Names in which assessed:
YANDY O CENTENO PINEDA

All of said property being in the County of Lee, State of Florida. Unless such certificate(s) shall be redeemed according to the law the property described in such certificate(s) will be sold to the highest bidder online at www.lee.realtaxdeed.com on 12/01/2026 at 10:00 am, by Kevin C. Karnes, Lee County Clerk of the Circuit Court & Comptroller.

October 9, 16, 23, 30, 2026
26-04195L

SECOND INSERTION

NOTICE OF APPLICATION FOR TAX DEED
Section 197.512 F.S.

Tax Deed #:2026000649

NOTICE IS HEREBY GIVEN that Savvy FL LLC First Horizon Collateral Assignee the holder of the following certificate(s) has filed said certificate(s) for a tax deed to be issued thereon. The certificate number(s), year(s) of issuance, the description of the property and the name(s) in which it was assessed are as follows:

Certificate Number: 24-13091 Year of Issuance 2024 Description of Property LOT 1, BLOCK 107, UNIT 10, SECTION 1, TOWNSHIP 44 SOUTH, RANGE 26 EAST, LEHIGH ACRES, ACCORDING TO THE MAP OR PLAT THEREOF, AS RECORDED IN PLAT BOOK 15, PAGE 58, OF THE PUBLIC RECORDS OF LEE COUNTY, FLORIDA Strap Number 01-44-26-10-00107.0010

Names in which assessed:
SKY HI MANAGEMENT LLC

All of said property being in the County of Lee, State of Florida. Unless such certificate(s) shall be redeemed according to the law the property described in such certificate(s) will be sold to the highest bidder online at www.lee.realtaxdeed.com on 12/01/2026 at 10:00 am, by Kevin C. Karnes, Lee County Clerk of the Circuit Court & Comptroller.

October 9, 16, 23, 30, 2026
26-04194L

SECOND INSERTION

NOTICE OF APPLICATION FOR TAX DEED
Section 197.512 F.S.

Tax Deed #:2026000594

NOTICE IS HEREBY GIVEN that Savvy FL LLC First Horizon Collateral Assignee the holder of the following certificate(s) has filed said certificate(s) for a tax deed to be issued thereon. The certificate number(s), year(s) of issuance, the description of the property and the name(s) in which it was assessed are as follows:

Certificate Number: 24-17510 Year of Issuance 2024 Description of Property LOTS 16, 17 AND 18, BLOCK 44, UNIT 11, SECTION 1, TOWNSHIP 44 SOUTH, RANGE 27 EAST, LEHIGH ACRES, AS RECORDED IN PLAT BOOK 15, PAGE 3, PUBLIC RECORDS OF LEE COUNTY, FLORIDA. Strap Number 01-44-27-L1-11044.0170

Names in which assessed:
NORMAN MCDANIEL, NORMAN MCDANIEL JR, RUTH MCDANIEL, RUTHELL MCDANIEL

All of said property being in the County of Lee, State of Florida. Unless such certificate(s) shall be redeemed according to the law the property described in such certificate(s) will be sold to the highest bidder online at www.lee.realtaxdeed.com on 12/01/2026 at 10:00 am, by Kevin C. Karnes, Lee County Clerk of the Circuit Court & Comptroller.

October 9, 16, 23, 30, 2026
26-04207L

SECOND INSERTION

NOTICE OF APPLICATION FOR TAX DEED
Section 197.512 F.S.

Tax Deed #:2026000632

NOTICE IS HEREBY GIVEN that Savvy FL LLC First Horizon Collateral Assignee the holder of the following certificate(s) has filed said certificate(s) for a tax deed to be issued thereon. The certificate number(s), year(s) of issuance, the description of the property and the name(s) in which it was assessed are as follows:

Certificate Number: 24-16790 Year of Issuance 2024 Description of Property LOT 8, BLOCK 20, UNIT 2, SECTION 13, TOWNSHIP 45 SOUTH, RANGE 26 EAST, A SUBDIVISION OF LEHIGH ACRES, ACCORDING TO THE MAP OR PLAT THEREOF ON FILE IN THE OFFICE OF THE CLERK OF THE CIRCUIT COURT, RECORDED IN PLAT BOOK 15, PAGE 99, OF THE PUBLIC RECORDS OF LEE COUNTY, FLORIDA. Strap Number 13-45-26-02-00020.0080

Names in which assessed:
FEDNER SANNON

All of said property being in the County of Lee, State of Florida. Unless such certificate(s) shall be redeemed according to the law the property described in such certificate(s) will be sold to the highest bidder online at www.lee.realtaxdeed.com on 12/01/2026 at 10:00 am, by Kevin C. Karnes, Lee County Clerk of the Circuit Court & Comptroller.

October 9, 16, 23, 30, 2026
26-04206L

SECOND INSERTION

NOTICE OF APPLICATION FOR TAX DEED
Section 197.512 F.S.

Tax Deed #:2026000654

NOTICE IS HEREBY GIVEN that Savvy FL LLC First Horizon Collateral Assignee the holder of the following certificate(s) has filed said certificate(s) for a tax deed to be issued thereon. The certificate number(s), year(s) of issuance, the description of the property and the name(s) in which it was assessed are as follows:

Certificate Number: 24-07603 Year of Issuance 2024 Description of Property A LOT OR PARCEL OF LAND LYING IN THAT CERTAIN SUBDIVISION, KNOWN AS EAST STADLER FARMS, ACCORDING TO MAP OR PLAT THEREOF ON FILE AND RECORDED IN THE OFFICE OF THE CLERK OF THE CIRCUIT COURT OF LEE COUNTY, FLORIDA, IN PLAT BOOK 5, AT PAGE 5, WHICH LOT OR PARCEL IS DESCRIBED AS FOLLOWS: BEGINNING AT THE NORTHWEST CORNER OF LOT 19 OF SAID SUBDIVISION; THENCE SOUTH 200 FEET TO THE POINT OF BEGINNING OF THE LANDS HEREIN DESCRIBED; THENCE EAST 200 FEET; THENCE SOUTH 117.65 FEET; THENCE WEST 200 FEET; THENCE NORTH 117.65 FEET TO THE POINT OF BEGINNING. Strap Number 25-44-24-01-00018.0000

Names in which assessed:
PRIVATE CAPITAL VENTURES INC., PRIVATE CAPITAL VENTURES, INC.

All of said property being in the County of Lee, State of Florida. Unless such certificate(s) shall be redeemed according to the law the property described in such certificate(s) will be sold to the highest bidder online at www.lee.realtaxdeed.com on 12/01/2026 at 10:00 am, by Kevin C. Karnes, Lee County Clerk of the Circuit Court & Comptroller.

October 9, 16, 23, 30, 2026
26-04173L

SECOND INSERTION

NOTICE OF APPLICATION FOR TAX DEED
Section 197.512 F.S.

Tax Deed #:2026000684

NOTICE IS HEREBY GIVEN that Savvy FL LLC First Horizon Collateral Assignee the holder of the following certificate(s) has filed said certificate(s) for a tax deed to be issued thereon. The certificate number(s), year(s) of issuance, the description of the property and the name(s) in which it was assessed are as follows:

Certificate Number: 24-09739 Year of Issuance 2024 Description of Property A PARCEL OF LAND LYING IN THE SW 1/4 OF SECTION 10, TOWNSHIP 43 SOUTH, RANGE 25 EAST, LEE COUNTY, FLORIDA, BEING THE SOUTH 1/2 OF THE FOLLOWING DESCRIBED PARCEL; THE NORTHEAST 1/4 OF THE NORTHEAST 1/4 OF THE SOUTHWEST 1/4 OF SECTION 10, TOWNSHIP 43 SOUTH, RANGE 25 EAST, LESS THE NORTH 453.84 FEET THEREOF AND THE NORTH 1/2 OF THE SOUTHEAST 1/4 OF THE NORTHEAST 1/4 OF THE SOUTHWEST 1/4 OF SECTION 10, TOWNSHIP 43 SOUTH, RANGE 25 EAST, LESS THE EAST 25.00 FEET THEREOF FOR R.O.W. FOR NALLE ROAD. A/K/A PART OF LOT 27 TRIPLE R ACRES AN UNRECORDED SUBDIVISION. Strap Number 10-43-25-00-00013.0160

Names in which assessed:
DAVID BROWN, WENDOLY BROWN

All of said property being in the County of Lee, State of Florida. Unless such certificate(s) shall be redeemed according to the law the property described in such certificate(s) will be sold to the highest bidder online at www.lee.realtaxdeed.com on 12/01/2026 at 10:00 am, by Kevin C. Karnes, Lee County Clerk of the Circuit Court & Comptroller.

October 9, 16, 23, 30, 2026
26-04181L

SECOND INSERTION

NOTICE OF APPLICATION FOR TAX DEED
Section 197.512 F.S.

Tax Deed #:2026000677

NOTICE IS HEREBY GIVEN that Savvy FL LLC First Horizon Collateral Assignee the holder of the following certificate(s) has filed said certificate(s) for a tax deed to be issued thereon. The certificate number(s), year(s) of issuance, the description of the property and the name(s) in which it was assessed are as follows:

Certificate Number: 24-09285 Year of Issuance 2024 Description of Property THE NORTHERLY 11 FEET OF LOT 520 AND THE SOUTHERLY 44 FEET OF LOT 521, BAYSIDE ESTATES, PHASE 7, PART 2, UNIT 2, ACCORDING TO THE PLAT THEREOF, RECORDED IN PLAT BOOK 60, PAGE(S) 74 AND 75, OF THE PUBLIC RECORDS OF LEE COUNTY, FLORIDA. TOGETHER WITH THAT CERTAIN 2000 PALM HARBOR MANUFACTURED HOME THAT IS PERMANENTLY AFFIXED THERETO AND MADE A PART THEREOF, BEING TAXED AS REAL PROPERTY: IDENTIFICATION NUMBER PH0612709AFL, TITLE NUMBER 84716986 IDENTIFICATION NUMBER PH0612709BFL, TITLE NUMBER 84716907 Strap Number 07-46-24-17-00000.5210

Names in which assessed:
BECKY KALAFUT, STEPHEN P KALAFUT

All of said property being in the County of Lee, State of Florida. Unless such certificate(s) shall be redeemed according to the law the property described in such certificate(s) will be sold to the highest bidder online at www.lee.realtaxdeed.com on 12/01/2026 at 10:00 am, by Kevin C. Karnes, Lee County Clerk of the Circuit Court & Comptroller.

October 9, 16, 23, 30, 2026
26-04179L

SECOND INSERTION

NOTICE OF APPLICATION FOR TAX DEED
Section 197.512 F.S.

Tax Deed #:2026000746

NOTICE IS HEREBY GIVEN that Savvy FL LLC First Horizon Collateral Assignee the holder of the following certificate(s) has filed said certificate(s) for a tax deed to be issued thereon. The certificate number(s), year(s) of issuance, the description of the property and the name(s) in which it was assessed are as follows:

Certificate Number: 24-11877 Year of Issuance 2024 Description of Property LOT 23, BLOCK K, A/K/A K-23, OF PHASE II, SITUATED IN CYPRESS BEND RV RESORT CONDOMINIUM AS SO DESIGNATED AND DESCRIBED IN THE DECLARATION OF CONDOMINIUM RECORDED IN OFFICIAL RECORD BOOK 1545, AT PAGES 330 THROUGH 363, AND ANY AMENDMENTS THERETO AND CONDOMINIUM PLAT BOOK 7, PAGES 165 THROUGH 173, AND ALSO DESCRIBED AS LOT 23, BLOCK E, UNIT TWO, SUBDIVISION PLAT BOOK 35, PAGES 103 THROUGH 107, ALL OF THE PUBLIC RECORDS OF LEE COUNTY, FLORIDA. Strap Number 28-46-25-E2-060K0.0230

Names in which assessed:
DAVID P & DONNA E WEISS FAMILY TRUST, DAVID P WEISS AND DONNA E WEISS FAMILY TRUST U/T/D FEBRUARY 19, 2013

All of said property being in the County of Lee, State of Florida. Unless such certificate(s) shall be redeemed according to the law the property described in such certificate(s) will be sold to the highest bidder online at www.lee.realtaxdeed.com on 12/01/2026 at 10:00 am, by Kevin C. Karnes, Lee County Clerk of the Circuit Court & Comptroller.

October 9, 16, 23, 30, 2026
26-04191L

SECOND INSERTION

NOTICE OF APPLICATION FOR TAX DEED
Section 197.512 F.S.

Tax Deed #:2026000735

NOTICE IS HEREBY GIVEN that Savvy FL LLC First Horizon Collateral Assignee the holder of the following certificate(s) has filed said certificate(s) for a tax deed to be issued thereon. The certificate number(s), year(s) of issuance, the description of the property and the name(s) in which it was assessed are as follows:

Certificate Number: 24-06054 Year of Issuance 2024 Description of Property LOT 232, LAZY DAYS MOBILE VILLAGE UNIT TWO, A SUBDIVISION, ACCORDING TO THE PLAT THEREOF, AS RECORDED IN OFFICIAL RECORDS BOOK 1011, PAGES 1851 THROUGH 1858, INCLUSIVE, OF THE PUBLIC RECORDS OF LEE COUNTY, FLORIDA. TOGETHER WITH THAT CERTAIN 1981 "CLARK" SINGLE WIDE MOBILE HOME IDENTIFICATION NUMBER FLFL1AA47700109 AND TITLE NUMBER 19265524. Strap Number 26-43-24-05-00000.2320

Names in which assessed:
GENE K KELLY, JASON P KELLY

All of said property being in the County of Lee, State of Florida. Unless such certificate(s) shall be redeemed according to the law the property described in such certificate(s) will be sold to the highest bidder online at www.lee.realtaxdeed.com on 12/01/2026 at 10:00 am, by Kevin C. Karnes, Lee County Clerk of the Circuit Court & Comptroller.

October 9, 16, 23, 30, 2026
26-04164L

SECOND INSERTION

NOTICE OF APPLICATION FOR TAX DEED
Section 197.512 F.S.

Tax Deed #:2026000712

NOTICE IS HEREBY GIVEN that Savvy FL LLC First Horizon Collateral Assignee the holder of the following certificate(s) has filed said certificate(s) for a tax deed to be issued thereon. The certificate number(s), year(s) of issuance, the description of the property and the name(s) in which it was assessed are as follows:

Certificate Number: 24-11409 Year of Issuance 2024 Description of Property CONDOMINIUM UNIT 1225, BUILDING 13575, OF MUSA AT DANIELS CONDOMINIUM, A CONDOMINIUM, ACCORDING TO THE DECLARATION OF CONDOMINIUM THEREOF, AS RECORDED IN CLERK'S FILE NO. 2006000193278, AND ANY AMENDMENTS THEREOF, OF THE PUBLIC RECORDS OF LEE COUNTY, FLORIDA, TOGETHER WITH AN UNDIVIDED INTEREST IN THE COMMON ELEMENTS APPURTENANT THERETO, AS SET FORTH IN SAID DECLARATION. Strap Number 20-45-25-18-00012.1225

Names in which assessed:
MARIA T AGNELLO

All of said property being in the County of Lee, State of Florida. Unless such certificate(s) shall be redeemed according to the law the property described in such certificate(s) will be sold to the highest bidder online at www.lee.realtaxdeed.com on 12/01/2026 at 10:00 am, by Kevin C. Karnes, Lee County Clerk of the Circuit Court & Comptroller.

October 9, 16, 23, 30, 2026
26-04189L

PUBLISH YOUR LEGAL NOTICE

We publish all Public sale, Estate & Court-related notices

- We offer an online payment portal for easy credit card payment
- Service includes us e-filing your affidavit to the Clerk's office on your behalf

Call 941-906-9386
and select the appropriate County name from the menu option
or email legal@businessobserverfl.com

FLORIDA'S NEWSPAPER FOR THE C-SUITE
Business Observer

LV20878_V20

Q&A

Q Do I need to register my business' name?

A Yes. The "fictitious name" or "dba" you register must be advertised at least once in a newspaper that is located within the county where your principal place of business is located prior to conducting business in the state of Florida.

VIEW NOTICES ONLINE AT
Legals.BusinessObserverFL.com

To publish your legal notice call:
941-906-9386

LV18237_V7

--- TAX DEEDS ---

SECOND INSERTION

NOTICE OF APPLICATION FOR TAX DEED
Section 197.512 F.S.

Tax Deed #:2026000849

NOTICE IS HEREBY GIVEN that ATCF II Florida-A LLC the holder of the following certificate(s) has filed said certificate(s) for a tax deed to be issued thereon. The certificate number(s), year(s) of issuance, the description of the property and the name(s) in which it was assessed are as follows:

Certificate Number: 24-03345 Year of Issuance 2024 Description of Property LOTS 46 AND 47, BLOCK 3752, UNIT 51 CAPE CORAL, ACCORDING TO PLAT THEREOF RECORDED IN PLAT BOOK 19, PAGES 2-16, OF THE PUBLIC RECORDS OF LEE COUNTY, FLORIDA. Strap Number 09-44-23-C4-03752.0460
Names in which assessed: BEATRICE GAGNON, ROBERT R GAGNON

All of said property being in the County of Lee, State of Florida. Unless such certificate(s) shall be redeemed according to the law the property described in such certificate(s) will be sold to the highest bidder online at www.lee.realtaxdeed.com on 12/01/2026 at 10:00 am, by Kevin C. Karnes, Lee County Clerk of the Circuit Court & Comptroller.

October 9, 16, 23, 30, 2026
26-04146L

SECOND INSERTION

NOTICE OF APPLICATION FOR TAX DEED
Section 197.512 F.S.

Tax Deed #:2026000810

NOTICE IS HEREBY GIVEN that ATCF II Florida-A LLC the holder of the following certificate(s) has filed said certificate(s) for a tax deed to be issued thereon. The certificate number(s), year(s) of issuance, the description of the property and the name(s) in which it was assessed are as follows:

Certificate Number: 24-02585 Year of Issuance 2024 Description of Property LOTS 59 AND 60, BLOCK 2628, CAPE CORAL UNIT 38, SUBDIVISION, ACCORDING TO THE PLAT THEREOF AS RECORDED IN PLAT BOOK 16, PAGES 87 TO 99, INCLUSIVE, IN THE PUBLIC RECORDS OF LEE COUNTY, FLORIDA. Strap Number 02-44-23-C4-02628.0590
Names in which assessed: STEMGENE, LLC

All of said property being in the County of Lee, State of Florida. Unless such certificate(s) shall be redeemed according to the law the property described in such certificate(s) will be sold to the highest bidder online at www.lee.realtaxdeed.com on 12/01/2026 at 10:00 am, by Kevin C. Karnes, Lee County Clerk of the Circuit Court & Comptroller.

October 9, 16, 23, 30, 2026
26-04234L

SECOND INSERTION

NOTICE OF APPLICATION FOR TAX DEED
Section 197.512 F.S.

Tax Deed #:2026000646

NOTICE IS HEREBY GIVEN that Savvy FL LLC First Horizon Collateral Assignee the holder of the following certificate(s) has filed said certificate(s) for a tax deed to be issued thereon. The certificate number(s), year(s) of issuance, the description of the property and the name(s) in which it was assessed are as follows:

Certificate Number: 24-07757 Year of Issuance 2024 Description of Property STRIP - SOUTH 10 FEET OF NORTH 330 FEET OF WEST 4828 FEET LYING SOUTH OF LOT 66 OF BLOCK 204, LESS THAT PART ADDED TO ADJACENT LOTS, PUBLIC RECORDS OF LEE COUNTY, FLORIDA. Strap Number 29-44-24-C2-00001.0060
Names in which assessed: STEVE KOMONDOREA

All of said property being in the County of Lee, State of Florida. Unless such certificate(s) shall be redeemed according to the law the property described in such certificate(s) will be sold to the highest bidder online at www.lee.realtaxdeed.com on 12/01/2026 at 10:00 am, by Kevin C. Karnes, Lee County Clerk of the Circuit Court & Comptroller.

October 9, 16, 23, 30, 2026
26-04174L

SECOND INSERTION

NOTICE OF APPLICATION FOR TAX DEED
Section 197.512 F.S.

Tax Deed #:2026000198

NOTICE IS HEREBY GIVEN that RAJ Tax Liens LLC the holder of the following certificate(s) has filed said certificate(s) for a tax deed to be issued thereon. The certificate number(s), year(s) of issuance, the description of the property and the name(s) in which it was assessed are as follows:

Certificate Number: 24-07015 Year of Issuance 2024 Description of Property LOT 25, BLOCK 1510, UNIT 17, CAPE CORAL SUBDIVISION, ACCORDING TO THE PLAT THEREOF RECORDED IN PLAT BOOK 19, PAGES 49 THROUGH 63, INCLUSIVE, IN THE PUBLIC RECORDS OF LEE COUNTY, FLORIDA. Strap Number 08-44-24-C4-01510.0250
Names in which assessed: ODRIGE GARAT

All of said property being in the County of Lee, State of Florida. Unless such certificate(s) shall be redeemed according to the law the property described in such certificate(s) will be sold to the highest bidder online at www.lee.realtaxdeed.com on 12/01/2026 at 10:00 am, by Kevin C. Karnes, Lee County Clerk of the Circuit Court & Comptroller.

October 9, 16, 23, 30, 2026
26-04237L

SECOND INSERTION

NOTICE OF APPLICATION FOR TAX DEED
Section 197.512 F.S.

Tax Deed #:2026000752

NOTICE IS HEREBY GIVEN that Savvy FL LLC First Horizon Collateral Assignee the holder of the following certificate(s) has filed said certificate(s) for a tax deed to be issued thereon. The certificate number(s), year(s) of issuance, the description of the property and the name(s) in which it was assessed are as follows:

Certificate Number: 24-11932 Year of Issuance 2024 Description of Property LOT F-47, OF MARINER'S COVE ACCORDING TO THE PLAT LOCATED IN THE UNRECORDED PLAT BOOK 4, PAGE 1, PUBLIC RECORDS OF LEE COUNTY, FLORIDA. Strap Number 29-46-25-E3-22000.F470
Names in which assessed: DAVID EDGREN, KENNETH D EDGREN, SUSAN EDGREN

All of said property being in the County of Lee, State of Florida. Unless such certificate(s) shall be redeemed according to the law the property described in such certificate(s) will be sold to the highest bidder online at www.lee.realtaxdeed.com on 12/01/2026 at 10:00 am, by Kevin C. Karnes, Lee County Clerk of the Circuit Court & Comptroller.

October 9, 16, 23, 30, 2026
26-04192L

SECOND INSERTION

NOTICE OF APPLICATION FOR TAX DEED
Section 197.512 F.S.

Tax Deed #:2026000827

NOTICE IS HEREBY GIVEN that ATCF II Florida-A LLC the holder of the following certificate(s) has filed said certificate(s) for a tax deed to be issued thereon. The certificate number(s), year(s) of issuance, the description of the property and the name(s) in which it was assessed are as follows:

Certificate Number: 24-02877 Year of Issuance 2024 Description of Property LOTS 11 AND 12, BLOCK 4037, UNIT 56, CAPE CORAL, ACCORDING TO THE PLAT THEREOF RECORDED IN PLAT BOOK 19, PAGES 107-116, OF THE PUBLIC RECORDS OF LEE COUNTY, FLORIDA Strap Number 05-44-23-C3-04037.0110
Names in which assessed: MICHAEL J REGO, PATRICK S REGO, THOMAS A REGO

All of said property being in the County of Lee, State of Florida. Unless such certificate(s) shall be redeemed according to the law the property described in such certificate(s) will be sold to the highest bidder online at www.lee.realtaxdeed.com on 12/01/2026 at 10:00 am, by Kevin C. Karnes, Lee County Clerk of the Circuit Court & Comptroller.

October 9, 16, 23, 30, 2026
26-04228L

SECOND INSERTION

NOTICE OF APPLICATION FOR TAX DEED
Section 197.512 F.S.

Tax Deed #:2026000824

NOTICE IS HEREBY GIVEN that ATCF II Florida-A LLC the holder of the following certificate(s) has filed said certificate(s) for a tax deed to be issued thereon. The certificate number(s), year(s) of issuance, the description of the property and the name(s) in which it was assessed are as follows:

Certificate Number: 24-02824 Year of Issuance 2024 Description of Property LOTS 13 AND 14, BLOCK 3832, UNIT 52, CAPE CORAL, ACCORDING TO PLAT THEREOF RECORDED IN PLAT BOOK 19, PAGES 49-63 OF THE PUBLIC RECORDS OF LEE COUNTY, FLORIDA. Strap Number 04-44-23-C4-03832.0130
Names in which assessed: MARIA REBECCA DIZON

All of said property being in the County of Lee, State of Florida. Unless such certificate(s) shall be redeemed according to the law the property described in such certificate(s) will be sold to the highest bidder online at www.lee.realtaxdeed.com on 12/01/2026 at 10:00 am, by Kevin C. Karnes, Lee County Clerk of the Circuit Court & Comptroller.

October 9, 16, 23, 30, 2026
26-04236L

SECOND INSERTION

NOTICE OF APPLICATION FOR TAX DEED
Section 197.512 F.S.

Tax Deed #:2026000832

NOTICE IS HEREBY GIVEN that ATCF II Florida-A LLC the holder of the following certificate(s) has filed said certificate(s) for a tax deed to be issued thereon. The certificate number(s), year(s) of issuance, the description of the property and the name(s) in which it was assessed are as follows:

Certificate Number: 24-03025 Year of Issuance 2024 Description of Property LOTS 10, 11 AND 12, BLOCK 4220, UNIT 60, CAPE CORAL SUBDIVISION, ACCORDING TO THE PLAT THEREOF, AS RECORDED IN PLAT BOOK 19, PAGES 154 THROUGH 169, INCLUSIVE, OF THE PUBLIC RECORDS OF LEE COUNTY, FLORIDA Strap Number 06-44-23-C4-04220.0100
Names in which assessed: DABAS REAL ESTATE LLC

All of said property being in the County of Lee, State of Florida. Unless such certificate(s) shall be redeemed according to the law the property described in such certificate(s) will be sold to the highest bidder online at www.lee.realtaxdeed.com on 12/01/2026 at 10:00 am, by Kevin C. Karnes, Lee County Clerk of the Circuit Court & Comptroller.

October 9, 16, 23, 30, 2026
26-04230L

SECOND INSERTION

NOTICE OF APPLICATION FOR TAX DEED
Section 197.512 F.S.

Tax Deed #:2026000836

NOTICE IS HEREBY GIVEN that ATCF II Florida-A LLC the holder of the following certificate(s) has filed said certificate(s) for a tax deed to be issued thereon. The certificate number(s), year(s) of issuance, the description of the property and the name(s) in which it was assessed are as follows:

Certificate Number: 24-03035 Year of Issuance 2024 Description of Property LOTS 7 AND 8, BLOCK 4143, UNIT 59, CAPE CORAL SUBDIVISION, ACCORDING TO THE PLAT THEREOF AS RECORDED IN PLAT BOOK 19, PAGES 140 THROUGH 153, INCLUSIVE, OF THE PUBLIC RECORDS OF LEE COUNTY, FLORIDA Strap Number 07-44-23-C1-04143.0070
Names in which assessed: LEVENTURES LLC

All of said property being in the County of Lee, State of Florida. Unless such certificate(s) shall be redeemed according to the law the property described in such certificate(s) will be sold to the highest bidder online at www.lee.realtaxdeed.com on 12/01/2026 at 10:00 am, by Kevin C. Karnes, Lee County Clerk of the Circuit Court & Comptroller.

October 9, 16, 23, 30, 2026
26-04232L

SECOND INSERTION

NOTICE OF APPLICATION FOR TAX DEED
Section 197.512 F.S.

Tax Deed #:2026000809

NOTICE IS HEREBY GIVEN that ATCF II Florida-A LLC the holder of the following certificate(s) has filed said certificate(s) for a tax deed to be issued thereon. The certificate number(s), year(s) of issuance, the description of the property and the name(s) in which it was assessed are as follows:

Certificate Number: 24-02568 Year of Issuance 2024 Description of Property LOTS 12 AND 13, BLOCK 2673, UNIT 38, CAPE CORAL SUBDIVISION, AS RECORDED IN PLAT BOOK 16, PAGES 87 THROUGH 99, INCLUSIVE, OF THE PUBLIC RECORDS OF LEE COUNTY, FLORIDA. Strap Number 02-44-23-C3-02673.0120
Names in which assessed: ROLANDO ALTABAS, ROLANDO ALTABAS JR

All of said property being in the County of Lee, State of Florida. Unless such certificate(s) shall be redeemed according to the law the property described in such certificate(s) will be sold to the highest bidder online at www.lee.realtaxdeed.com on 12/01/2026 at 10:00 am, by Kevin C. Karnes, Lee County Clerk of the Circuit Court & Comptroller.

October 9, 16, 23, 30, 2026
26-04233L

SECOND INSERTION

NOTICE OF APPLICATION FOR TAX DEED
Section 197.512 F.S.

Tax Deed #:2026000753

NOTICE IS HEREBY GIVEN that Savvy FL LLC First Horizon Collateral Assignee the holder of the following certificate(s) has filed said certificate(s) for a tax deed to be issued thereon. The certificate number(s), year(s) of issuance, the description of the property and the name(s) in which it was assessed are as follows:

Certificate Number: 24-12849 Year of Issuance 2024 Description of Property LOT 68, BLOCK 1, FORT MYERS SHORES, UNIT 1, A SUBDIVISION ACCORDING TO THE PLAT THEREOF RECORDED IN PLAT BOOK 9, PAGES 151-154, PUBLIC RECORDS OF LEE COUNTY, FLORIDA. Strap Number 30-43-26-01-00001.0680
Names in which assessed: SAMUEL V JOHNSON

All of said property being in the County of Lee, State of Florida. Unless such certificate(s) shall be redeemed according to the law the property described in such certificate(s) will be sold to the highest bidder online at www.lee.realtaxdeed.com on 12/01/2026 at 10:00 am, by Kevin C. Karnes, Lee County Clerk of the Circuit Court & Comptroller.

October 9, 16, 23, 30, 2026
26-04193L

SECOND INSERTION

NOTICE OF APPLICATION FOR TAX DEED
Section 197.512 F.S.

Tax Deed #:2026000823

NOTICE IS HEREBY GIVEN that ATCF II Florida-A LLC the holder of the following certificate(s) has filed said certificate(s) for a tax deed to be issued thereon. The certificate number(s), year(s) of issuance, the description of the property and the name(s) in which it was assessed are as follows:

Certificate Number: 24-02813 Year of Issuance 2024 Description of Property LOTS 32 AND 33, BLOCK 3791, UNIT 52, CAPE CORAL SUBDIVISION, ACCORDING TO THE MAP OR PLAT THEREOF, AS RECORDED IN PLAT BOOK 19, PAGE(S) 49 THROUGH 63, OF THE PUBLIC RECORDS OF LEE COUNTY, FLORIDA. Strap Number 04-44-23-C4-03791.0320
Names in which assessed: HABIBA DRUMMOND

All of said property being in the County of Lee, State of Florida. Unless such certificate(s) shall be redeemed according to the law the property described in such certificate(s) will be sold to the highest bidder online at www.lee.realtaxdeed.com on 12/01/2026 at 10:00 am, by Kevin C. Karnes, Lee County Clerk of the Circuit Court & Comptroller.

October 9, 16, 23, 30, 2026
26-04235L

SECOND INSERTION

NOTICE OF APPLICATION FOR TAX DEED
Section 197.512 F.S.

Tax Deed #:2026000612

NOTICE IS HEREBY GIVEN that Savvy FL LLC First Horizon Collateral Assignee the holder of the following certificate(s) has filed said certificate(s) for a tax deed to be issued thereon. The certificate number(s), year(s) of issuance, the description of the property and the name(s) in which it was assessed are as follows:

Certificate Number: 24-20182 Year of Issuance 2024 Description of Property EAST 1/2 OF LOT 12, BLOCK 17, LEHIGH ACRES, UNIT 5, SECTION 21, TOWNSHIP 44 SOUTH, RANGE 27 EAST, ACCORDING TO THE MAP OR PLAT THEREOF, RECORDED IN PLAT BOOK 15, PAGE 30, PUBLIC RECORDS OF LEE COUNTY, FLORIDA. Strap Number 21-44-27-05-00017.012B
Names in which assessed: CHRISTIAN SILVESTRI

All of said property being in the County of Lee, State of Florida. Unless such certificate(s) shall be redeemed according to the law the property described in such certificate(s) will be sold to the highest bidder online at www.lee.realtaxdeed.com on 12/01/2026 at 10:00 am, by Kevin C. Karnes, Lee County Clerk of the Circuit Court & Comptroller.

October 9, 16, 23, 30, 2026
26-04214L

SECOND INSERTION

NOTICE OF APPLICATION FOR TAX DEED
Section 197.512 F.S.

Tax Deed #:2026000607

NOTICE IS HEREBY GIVEN that Savvy FL LLC First Horizon Collateral Assignee the holder of the following certificate(s) has filed said certificate(s) for a tax deed to be issued thereon. The certificate number(s), year(s) of issuance, the description of the property and the name(s) in which it was assessed are as follows:

Certificate Number: 24-19595 Year of Issuance 2024 Description of Property THE EAST 1/2 OF LOT 13, BLOCK 44, UNIT 11, SECTION 15, TOWNSHIP 44 SOUTH, RANGE 27 EAST, LEHIGH ACRES, ACCORDING TO THE MAP OR PLAT THEREOF, AS RECORDED IN PLAT BOOK 15, PAGE 17, OF THE PUBLIC RECORDS OF LEE COUNTY, FLORIDA. Strap Number 15-44-27-11-00044.013B
Names in which assessed: CECIL BRAMBLE

All of said property being in the County of Lee, State of Florida. Unless such certificate(s) shall be redeemed according to the law the property described in such certificate(s) will be sold to the highest bidder online at www.lee.realtaxdeed.com on 12/01/2026 at 10:00 am, by Kevin C. Karnes, Lee County Clerk of the Circuit Court & Comptroller.

October 9, 16, 23, 30, 2026
26-04212L

SECOND INSERTION

NOTICE OF APPLICATION FOR TAX DEED
Section 197.512 F.S.

Tax Deed #:2026000637

NOTICE IS HEREBY GIVEN that Savvy FL LLC First Horizon Collateral Assignee the holder of the following certificate(s) has filed said certificate(s) for a tax deed to be issued thereon. The certificate number(s), year(s) of issuance, the description of the property and the name(s) in which it was assessed are as follows:

Certificate Number: 24-19913 Year of Issuance 2024 Description of Property LOT 18, BLOCK 36, UNIT 9, REPLAT OF SECTION 18, TOWNSHIP 44S, RANGE 27E, A SUBDIVISION OF LEHIGH ACRES, ACCORDING TO THE PLAT THEREOF, AS RECORDED IN PLAT BOOK 15, PAGE 22, PUBLIC RECORDS OF LEE COUNTY, FLORIDA Strap Number 18-44-27-09-00036.0180
Names in which assessed: ESTATE OF RAUL ELVIRO, RAUL ELVIRO

All of said property being in the County of Lee, State of Florida. Unless such certificate(s) shall be redeemed according to the law the property described in such certificate(s) will be sold to the highest bidder online at www.lee.realtaxdeed.com on 12/01/2026 at 10:00 am, by Kevin C. Karnes, Lee County Clerk of the Circuit Court & Comptroller.

October 9, 16, 23, 30, 2026
26-04213L

SECOND INSERTION

NOTICE OF APPLICATION FOR TAX DEED
Section 197.512 F.S.

Tax Deed #:2026000621

NOTICE IS HEREBY GIVEN that Savvy FL LLC First Horizon Collateral Assignee the holder of the following certificate(s) has filed said certificate(s) for a tax deed to be issued thereon. The certificate number(s), year(s) of issuance, the description of the property and the name(s) in which it was assessed are as follows:

Certificate Number: 24-23816 Year of Issuance 2024 Description of Property LOT 6, BLOCK 68, UNIT 11, SECTION 21, TOWNSHIP 45 SOUTH, RANGE 27 EAST, LEHIGH ACRES, ACCORDING TO PLAT THEREOF AS RECORDED IN PLAT BOOK 18, PAGE 64, OF THE PUBLIC RECORDS OF LEE COUNTY, FLORIDA Strap Number 21-45-27-11-00068.0060
Names in which assessed: Dwayne Singleton, LOVETTE SINGLETON

All of said property being in the County of Lee, State of Florida. Unless such certificate(s) shall be redeemed according to the law the property described in such certificate(s) will be sold to the highest bidder online at www.lee.realtaxdeed.com on 12/01/2026 at 10:00 am, by Kevin C. Karnes, Lee County Clerk of the Circuit Court & Comptroller.

October 9, 16, 23, 30, 2026
26-04224L

SECOND INSERTION

NOTICE OF APPLICATION FOR TAX DEED
Section 197.512 F.S.

Tax Deed #:2026000835

NOTICE IS HEREBY GIVEN that ATCF II Florida-A LLC the holder of the following certificate(s) has filed said certificate(s) for a tax deed to be issued thereon. The certificate number(s), year(s) of issuance, the description of the property and the name(s) in which it was assessed are as follows:

Certificate Number: 24-21978 Year of Issuance 2024 Description of Property LOT 28, BLOCK 5, UNIT 1, SECTION 6, TOWNSHIP 45 SOUTH, RANGE 27 EAST, LEHIGH ACRES, ACCORDING TO THE MAP OR PLAT THEREOF ON FILE IN THE OFFICE OF THE CLERK OF THE CIRCUIT COURT, RECORDED IN PLAT BOOK 12, PAGE 138, PUBLIC RECORDS OF LEE COUNTY, FLORIDA Strap Number 06-45-27-L2-01005.0280
Names in which assessed: EDWARD SOFA

All of said property being in the County of Lee, State of Florida. Unless such certificate(s) shall be redeemed according to the law the property described in such certificate(s) will be sold to the highest bidder online at www.lee.realtaxdeed.com on 12/01/2026 at 10:00 am, by Kevin C. Karnes, Lee County Clerk of the Circuit Court & Comptroller.

October 9, 16, 23, 30, 2026
26-04231L

SECOND INSERTION

NOTICE OF APPLICATION FOR TAX DEED
Section 197.512 F.S.

Tax Deed #:2026000734

NOTICE IS HEREBY GIVEN that Savvy FL LLC First Horizon Collateral Assignee the holder of the following certificate(s) has filed said certificate(s) for a tax deed to be issued thereon. The certificate number(s), year(s) of issuance, the description of the property and the name(s) in which it was assessed are as follows:

Certificate Number: 24-06037 Year of Issuance 2024 Description of Property LOT 3, BLOCK 54, SUNCOAST ESTATES UNRECORDED, ACCORDING TO THE PLAT THEREOF, AS RECORDED IN OFFICIAL RECORDS BOOK 32, PAGE 524, OF THE PUBLIC RECORDS OF LEE COUNTY, FLORIDA Strap Number 26-43-24-03-00054.0030
Names in which assessed: ESTATE OF RONALD E FRIEDMAN, RONALD ERROL FRIEDMAN

All of said property being in the County of Lee, State of Florida. Unless such certificate(s) shall be redeemed according to the law the property described in such certificate(s) will be sold to the highest bidder online at www.lee.realtaxdeed.com on 12/01/2026 at 10:00 am, by Kevin C. Karnes, Lee County Clerk of the Circuit Court & Comptroller.

October 9, 16, 23, 30, 2026
26-04163L

PUBLISH YOUR LEGAL NOTICE
Call 941-906-9386 and select the appropriate County name from the menu option
or email legal@businessobserverfl.com
FLORIDA'S NEWSPAPER FOR THE C-SUITE
Business Observer
LV20878_V28

--- TAX DEEDS ---

SECOND INSERTION

NOTICE OF APPLICATION FOR TAX DEED
Section 197.512 F.S.

Tax Deed #:2026000708

NOTICE IS HEREBY GIVEN that Savvy FL LLC First Horizon Collateral Assignee the holder of the following certificate(s) has filed said certificate(s) for a tax deed to be issued thereon. The certificate number(s), year(s) of issuance, the description of the property and the name(s) in which it was assessed are as follows:

Certificate Number: 24-05152 Year of Issuance 2024 Description of Property LOT 2, BLOCK A, THE DUNES AT SANIBEL ISLAND, ACCORDING TO THE MAP OR PLAT THEREOF RECORDED IN PLAT BOOK 29, PAGES 7 THROUGH 12, INCLUSIVE, OF THE PUBLIC RECORDS OF LEE COUNTY, FLORIDA. Strap Number 19-46-23-T4-0100A.0020

Names in which assessed:
TRAVELING MANNS LLC

All of said property being in the County of Lee, State of Florida. Unless such certificate(s) shall be redeemed according to the law the property described in such certificate(s) will be sold to the highest bidder online at www.lee.realtaxdeed.com on 12/01/2026 at 10:00 am, by Kevin C. Karnes, Lee County Clerk of the Circuit Court & Comptroller.

October 9, 16, 23, 30, 2026

26-04159L

SECOND INSERTION

NOTICE OF APPLICATION FOR TAX DEED
Section 197.512 F.S.

Tax Deed #:2026000689

NOTICE IS HEREBY GIVEN that Savvy FL LLC First Horizon Collateral Assignee the holder of the following certificate(s) has filed said certificate(s) for a tax deed to be issued thereon. The certificate number(s), year(s) of issuance, the description of the property and the name(s) in which it was assessed are as follows:

Certificate Number: 24-03516 Year of Issuance 2024 Description of Property LOTS 11, 12 AND 13, BLOCK 3602, CAPE CORAL SUBDIVISION, UNIT 46, ACCORDING TO THE PLAT THEREOF, RECORDED IN PLAT BOOK 17, PAGES 118-129, OF THE PUBLIC RECORDS OF LEE COUNTY, FLORIDA. Strap Number 12-44-23-C3-03602.0110

Names in which assessed:
SAULANDY LLC

All of said property being in the County of Lee, State of Florida. Unless such certificate(s) shall be redeemed according to the law the property described in such certificate(s) will be sold to the highest bidder online at www.lee.realtaxdeed.com on 12/01/2026 at 10:00 am, by Kevin C. Karnes, Lee County Clerk of the Circuit Court & Comptroller.

October 9, 16, 23, 30, 2026

26-04155L

SECOND INSERTION

NOTICE OF APPLICATION FOR TAX DEED
Section 197.512 F.S.

Tax Deed #:2026000687

NOTICE IS HEREBY GIVEN that Savvy FL LLC First Horizon Collateral Assignee the holder of the following certificate(s) has filed said certificate(s) for a tax deed to be issued thereon. The certificate number(s), year(s) of issuance, the description of the property and the name(s) in which it was assessed are as follows:

Certificate Number: 24-07121 Year of Issuance 2024 Description of Property LOTS 44 THROUGH 50, INCLUSIVE, AND LOTS 90 THROUGH 97, INCLUSIVE, BLOCK "J", CABANA CITY, PLAT BOOK 8, PAGE 61, PUBLIC RECORDS OF LEE COUNTY, FLORIDA. Strap Number 11-44-24-01-000J0.0440

Names in which assessed:
ALICE D HEWITT, FREDERICK B HEWITT

All of said property being in the County of Lee, State of Florida. Unless such certificate(s) shall be redeemed according to the law the property described in such certificate(s) will be sold to the highest bidder online at www.lee.realtaxdeed.com on 12/01/2026 at 10:00 am, by Kevin C. Karnes, Lee County Clerk of the Circuit Court & Comptroller.

October 9, 16, 23, 30, 2026

26-04169L

SECOND INSERTION

NOTICE OF APPLICATION FOR TAX DEED
Section 197.512 F.S.

Tax Deed #:2026000592

NOTICE IS HEREBY GIVEN that Savvy FL LLC First Horizon Collateral Assignee the holder of the following certificate(s) has filed said certificate(s) for a tax deed to be issued thereon. The certificate number(s), year(s) of issuance, the description of the property and the name(s) in which it was assessed are as follows:

Certificate Number: 23-06133 Year of Issuance 2023 Description of Property THE MOST NORTHERNLY 16 FEET OF LOT 25, BLOCK 577, CAPE CORAL UNIT 12, AS SHOWN IN PLAT RECORDED IN PLAT BOOK 13, PAGES 49-55, OFFICIAL PUBLIC RECORDS OF LEE COUNTY, FLORIDA. Strap Number 05-45-24-C1-00577.025A

Names in which assessed:
Jean Luc Helson

All of said property being in the County of Lee, State of Florida. Unless such certificate(s) shall be redeemed according to the law the property described in such certificate(s) will be sold to the highest bidder online at www.lee.realtaxdeed.com on 12/01/2026 at 10:00 am, by Kevin C. Karnes, Lee County Clerk of the Circuit Court & Comptroller.

October 9, 16, 23, 30, 2026

26-04150L

SECOND INSERTION

NOTICE OF APPLICATION FOR TAX DEED
Section 197.512 F.S.

Tax Deed #:2026000841

NOTICE IS HEREBY GIVEN that ATCF II Florida-A LLC the holder of the following certificate(s) has filed said certificate(s) for a tax deed to be issued thereon. The certificate number(s), year(s) of issuance, the description of the property and the name(s) in which it was assessed are as follows:

Certificate Number: 24-10203 Year of Issuance 2024 Description of Property LOT 1, LESS THE EASTERLY 3 AND 1/3 FEET THEREOF, HEITMAN'S REPLAT, ACCORDING TO THE PLAT THEREOF RECORDED IN PLAT BOOK 10, PAGE 55, PUBLIC RECORDS OF LEE COUNTY, FLORIDA. Strap Number 07-44-25-P3-00400.0010

Names in which assessed:
MARIA MERCEDES MARTINEZ PEREZ

All of said property being in the County of Lee, State of Florida. Unless such certificate(s) shall be redeemed according to the law the property described in such certificate(s) will be sold to the highest bidder online at www.lee.realtaxdeed.com on 12/01/2026 at 10:00 am, by Kevin C. Karnes, Lee County Clerk of the Circuit Court & Comptroller.

October 9, 16, 23, 30, 2026

26-04144L

SECOND INSERTION

NOTICE OF APPLICATION FOR TAX DEED
Section 197.512 F.S.

Tax Deed #:2026000839

NOTICE IS HEREBY GIVEN that ATCF II Florida-A LLC the holder of the following certificate(s) has filed said certificate(s) for a tax deed to be issued thereon. The certificate number(s), year(s) of issuance, the description of the property and the name(s) in which it was assessed are as follows:

Certificate Number: 24-03096 Year of Issuance 2024 Description of Property LOTS 20 AND 21, BLOCK 4130, UNIT 59, CAPE CORAL SUBDIVISION, ACCORDING TO THE PLAT THEREOF RECORDED IN PLAT BOOK 19, PAGES 140 TO 153, INCLUSIVE, IN THE PUBLIC RECORDS OF LEE COUNTY, FLORIDA. Strap Number 07-44-23-C3-04130.0200

Names in which assessed:
AURORA SANTIAGO, FRANKLIN SANTIAGO

All of said property being in the County of Lee, State of Florida. Unless such certificate(s) shall be redeemed according to the law the property described in such certificate(s) will be sold to the highest bidder online at www.lee.realtaxdeed.com on 12/01/2026 at 10:00 am, by Kevin C. Karnes, Lee County Clerk of the Circuit Court & Comptroller.

October 9, 16, 23, 30, 2026

26-04143L

SECOND INSERTION

NOTICE OF APPLICATION FOR TAX DEED
Section 197.512 F.S.

Tax Deed #:2026000663

NOTICE IS HEREBY GIVEN that Savvy FL LLC First Horizon Collateral Assignee the holder of the following certificate(s) has filed said certificate(s) for a tax deed to be issued thereon. The certificate number(s), year(s) of issuance, the description of the property and the name(s) in which it was assessed are as follows:

Certificate Number: 24-10626 Year of Issuance 2024 Description of Property LOTS 10 AND 11, BLOCK F, SANTA ANNA PARK, A SUBDIVISION ACCORDING TO THE PLAT THEREOF, AS RECORDED IN PLAT BOOK 8, PAGE 4, IN THE PUBLIC RECORDS OF LEE COUNTY, FLORIDA. Strap Number 17-44-25-P1-0190F.0100

Names in which assessed:
ALEX MIGUEL NATAREN RIVERA

All of said property being in the County of Lee, State of Florida. Unless such certificate(s) shall be redeemed according to the law the property described in such certificate(s) will be sold to the highest bidder online at www.lee.realtaxdeed.com on 12/01/2026 at 10:00 am, by Kevin C. Karnes, Lee County Clerk of the Circuit Court & Comptroller.

October 9, 16, 23, 30, 2026

26-04184L

SECOND INSERTION

NOTICE OF APPLICATION FOR TAX DEED
Section 197.512 F.S.

Tax Deed #:2026000851

NOTICE IS HEREBY GIVEN that ATCF II Florida-A LLC the holder of the following certificate(s) has filed said certificate(s) for a tax deed to be issued thereon. The certificate number(s), year(s) of issuance, the description of the property and the name(s) in which it was assessed are as follows:

Certificate Number: 24-00104 Year of Issuance 2024 Description of Property LOTS 48 AND 56, REDFISH SHORES, A SUBDIVISION ACCORDING TO THE PLAT THEREOF, AS RECORDED IN OFFICIAL RECORDS BOOK 475, AT PAGES 613 THROUGH 617, IN THE PUBLIC RECORDS OF LEE COUNTY, FLORIDA Strap Number 09-45-21-01-00000.0480

Names in which assessed:
JOHN J TONDRA III, UNKNOWN TRUST

All of said property being in the County of Lee, State of Florida. Unless such certificate(s) shall be redeemed according to the law the property described in such certificate(s) will be sold to the highest bidder online at www.lee.realtaxdeed.com on 12/01/2026 at 10:00 am, by Kevin C. Karnes, Lee County Clerk of the Circuit Court & Comptroller.

October 9, 16, 23, 30, 2026

26-04147L

SECOND INSERTION

NOTICE OF APPLICATION FOR TAX DEED
Section 197.512 F.S.

Tax Deed #:2026000749

NOTICE IS HEREBY GIVEN that Savvy FL LLC First Horizon Collateral Assignee the holder of the following certificate(s) has filed said certificate(s) for a tax deed to be issued thereon. The certificate number(s), year(s) of issuance, the description of the property and the name(s) in which it was assessed are as follows:

Certificate Number: 24-25206 Year of Issuance 2024 Description of Property LOTS 12 AND 13, BLOCK 3, UNIT 2, OF LEHIGH ACRES, SECTION 29, TOWNSHIP 45 SOUTH, RANGE 27 EAST, ACCORDING TO THE PLAT THEREOF AS RECORDED IN PLAT BOOK 20, PAGE 66, OF THE PUBLIC RECORDS OF LEE COUNTY, FLORIDA. Strap Number 29-45-27-L2-02003.0130

Names in which assessed:
JACQUES H DESIR

All of said property being in the County of Lee, State of Florida. Unless such certificate(s) shall be redeemed according to the law the property described in such certificate(s) will be sold to the highest bidder online at www.lee.realtaxdeed.com on 12/01/2026 at 10:00 am, by Kevin C. Karnes, Lee County Clerk of the Circuit Court & Comptroller.

October 9, 16, 23, 30, 2026

26-04225L

SECOND INSERTION

NOTICE OF APPLICATION FOR TAX DEED
Section 197.512 F.S.

Tax Deed #:2026000724

NOTICE IS HEREBY GIVEN that Savvy FL LLC First Horizon Collateral Assignee the holder of the following certificate(s) has filed said certificate(s) for a tax deed to be issued thereon. The certificate number(s), year(s) of issuance, the description of the property and the name(s) in which it was assessed are as follows:

Certificate Number: 24-20549 Year of Issuance 2024 Description of Property LOT 24, BLOCK 45, UNIT 12, SECTION 24, TOWNSHIP 44 SOUTH, RANGE 27 EAST, LEHIGH ACRES, ACCORDING TO THE PLAT THEREOF AS RECORDED IN PLAT BOOK 15, PAGE 35, PUBLIC RECORDS OF LEE COUNTY, FLORIDA. Strap Number 24-44-27-12-00045.0240

Names in which assessed:
ZOILA RIVERA

All of said property being in the County of Lee, State of Florida. Unless such certificate(s) shall be redeemed according to the law the property described in such certificate(s) will be sold to the highest bidder online at www.lee.realtaxdeed.com on 12/01/2026 at 10:00 am, by Kevin C. Karnes, Lee County Clerk of the Circuit Court & Comptroller.

October 9, 16, 23, 30, 2026

26-04218L

SECOND INSERTION

NOTICE OF APPLICATION FOR TAX DEED
Section 197.512 F.S.

Tax Deed #:2026000624

NOTICE IS HEREBY GIVEN that Savvy FL LLC First Horizon Collateral Assignee the holder of the following certificate(s) has filed said certificate(s) for a tax deed to be issued thereon. The certificate number(s), year(s) of issuance, the description of the property and the name(s) in which it was assessed are as follows:

Certificate Number: 24-20334 Year of Issuance 2024 Description of Property LOT 10, BLOCK 6, UNIT 2, LEHIGH ACRES, SECTION 23, TOWNSHIP 44, SOUTH, RANGE 27 EAST, ACCORDING TO THE PLAT THEREOF, AS RECORDED IN PLAT BOOK 15, PAGE 34, INCLUSIVE, OF THE PUBLIC RECORDS OF LEE COUNTY, FLORIDA. Strap Number 23-44-27-02-00006.0100

Names in which assessed:
LYN BUNCH, LYN F. BUNCH

All of said property being in the County of Lee, State of Florida. Unless such certificate(s) shall be redeemed according to the law the property described in such certificate(s) will be sold to the highest bidder online at www.lee.realtaxdeed.com on 12/01/2026 at 10:00 am, by Kevin C. Karnes, Lee County Clerk of the Circuit Court & Comptroller.

October 9, 16, 23, 30, 2026

26-04217L

SECOND INSERTION

NOTICE OF APPLICATION FOR TAX DEED
Section 197.512 F.S.

Tax Deed #:2026000659

NOTICE IS HEREBY GIVEN that Savvy FL LLC First Horizon Collateral Assignee the holder of the following certificate(s) has filed said certificate(s) for a tax deed to be issued thereon. The certificate number(s), year(s) of issuance, the description of the property and the name(s) in which it was assessed are as follows:

Certificate Number: 24-16182 Year of Issuance 2024 Description of Property LOT 17, BLOCK 88, UNIT 9, SECTION 3, TOWNSHIP 45 SOUTH, RANGE 26 EAST, LEHIGH ACRES, ACCORDING TO THE PLAT THEREOF, AS RECORDED IN PLAT BOOK 15, PAGE 95, OF THE PUBLIC RECORDS OF LEE COUNTY, FLORIDA Strap Number 03-45-26-09-00088.0170

Names in which assessed:
JACQUES H DESIR

All of said property being in the County of Lee, State of Florida. Unless such certificate(s) shall be redeemed according to the law the property described in such certificate(s) will be sold to the highest bidder online at www.lee.realtaxdeed.com on 12/01/2026 at 10:00 am, by Kevin C. Karnes, Lee County Clerk of the Circuit Court & Comptroller.

October 9, 16, 23, 30, 2026

26-04205L

SECOND INSERTION

NOTICE OF APPLICATION FOR TAX DEED
Section 197.512 F.S.

Tax Deed #:2026000645

NOTICE IS HEREBY GIVEN that Savvy FL LLC First Horizon Collateral Assignee the holder of the following certificate(s) has filed said certificate(s) for a tax deed to be issued thereon. The certificate number(s), year(s) of issuance, the description of the property and the name(s) in which it was assessed are as follows:

Certificate Number: 24-06075 Year of Issuance 2024 Description of Property LOT 3, BLOCK 7 TAMIAMI VILLAGE (FORMERLY KNOWN AS LEESURE VILLAGE) ACCORDING TO THE PLAT THEREOF, RECORDED IN CONDOMINIUM PLAT BOOK 3, PAGES 60-76, INCLUSIVE, LEE COUNTY PUBLIC RECORDS. Strap Number 27-43-24-02-00007.0030

Names in which assessed:
SUSAN E HOWARD, SUSAN ELAINE HOWARD LIVING TRUST DATED 4/20/2026

All of said property being in the County of Lee, State of Florida. Unless such certificate(s) shall be redeemed according to the law the property described in such certificate(s) will be sold to the highest bidder online at www.lee.realtaxdeed.com on 12/01/2026 at 10:00 am, by Kevin C. Karnes, Lee County Clerk of the Circuit Court & Comptroller.

October 9, 16, 23, 30, 2026

26-04165L

SECOND INSERTION

NOTICE OF APPLICATION FOR TAX DEED
Section 197.512 F.S.

Tax Deed #:2026000602

NOTICE IS HEREBY GIVEN that Savvy FL LLC First Horizon Collateral Assignee the holder of the following certificate(s) has filed said certificate(s) for a tax deed to be issued thereon. The certificate number(s), year(s) of issuance, the description of the property and the name(s) in which it was assessed are as follows:

Certificate Number: 24-13532 Year of Issuance 2024 Description of Property LOT 18, BLOCK 16, UNIT 2, SECTION 11, TOWNSHIP 44 SOUTH, RANGE 26 EAST, LEHIGH ACRES, ACCORDING TO THE MAP OR PLAT THEREOF ON FILE IN THE OFFICE OF THE CLERK OF THE CIRCUIT COURT, RECORDED IN PLAT BOOK 15, PAGE 60, PUBLIC RECORDS, LEE COUNTY, FLORIDA. Strap Number 11-44-26-02-00016.0180

Names in which assessed:
CHRISTIAN RISPER

All of said property being in the County of Lee, State of Florida. Unless such certificate(s) shall be redeemed according to the law the property described in such certificate(s) will be sold to the highest bidder online at www.lee.realtaxdeed.com on 12/01/2026 at 10:00 am, by Kevin C. Karnes, Lee County Clerk of the Circuit Court & Comptroller.

October 9, 16, 23, 30, 2026

26-04199L

SECOND INSERTION

NOTICE OF APPLICATION FOR TAX DEED
Section 197.512 F.S.

Tax Deed #:2026000655

NOTICE IS HEREBY GIVEN that Savvy FL LLC First Horizon Collateral Assignee the holder of the following certificate(s) has filed said certificate(s) for a tax deed to be issued thereon. The certificate number(s), year(s) of issuance, the description of the property and the name(s) in which it was assessed are as follows:

Certificate Number: 24-20627 Year of Issuance 2024 Description of Property LOT 12, BLOCK 24, UNIT 6, SECTION 25, TOWNSHIP 44 SOUTH, RANGE 27 EAST, LEHIGH ACRES, A SUBDIVISION ACCORDING TO THE PLAT THEREOF AS RECORDED IN PLAT BOOK 15, AT PAGE 37, IN THE PUBLIC RECORDS OF LEE COUNTY, FLORIDA. Strap Number 25-44-27-06-00024.0120

Names in which assessed:
ROLLY R KISSOON, SANKER D KISSOON

All of said property being in the County of Lee, State of Florida. Unless such certificate(s) shall be redeemed according to the law the property described in such certificate(s) will be sold to the highest bidder online at www.lee.realtaxdeed.com on 12/01/2026 at 10:00 am, by Kevin C. Karnes, Lee County Clerk of the Circuit Court & Comptroller.

October 9, 16, 23, 30, 2026

26-04220L

SECOND INSERTION

NOTICE OF APPLICATION FOR TAX DEED
Section 197.512 F.S.

Tax Deed #:2026000635

NOTICE IS HEREBY GIVEN that Savvy FL LLC First Horizon Collateral Assignee the holder of the following certificate(s) has filed said certificate(s) for a tax deed to be issued thereon. The certificate number(s), year(s) of issuance, the description of the property and the name(s) in which it was assessed are as follows:

Certificate Number: 24-19584 Year of Issuance 2024 Description of Property LOT 14, BLOCK 41, UNIT 11, SECTION 15, TOWNSHIP 44 SOUTH, RANGE 27 EAST, LEHIGH ACRES, A SUBDIVISION, ACCORDING TO THE PLAT THEREOF, AS RECORDED IN PLAT BOOK 15, PAGE 17, OF THE PUBLIC RECORDS OF LEE COUNTY, FLORIDA. Strap Number 15-44-27-11-00041.0140

Names in which assessed:
AEC DEVELOPERS CORP, AEC DEVELOPERS CORP.

All of said property being in the County of Lee, State of Florida. Unless such certificate(s) shall be redeemed according to the law the property described in such certificate(s) will be sold to the highest bidder online at www.lee.realtaxdeed.com on 12/01/2026 at 10:00 am, by Kevin C. Karnes, Lee County Clerk of the Circuit Court & Comptroller.

October 9, 16, 23, 30, 2026

26-04211L

SECOND INSERTION

NOTICE OF APPLICATION FOR TAX DEED
Section 197.512 F.S.

Tax Deed #:2026000634

NOTICE IS HEREBY GIVEN that Savvy FL LLC First Horizon Collateral Assignee the holder of the following certificate(s) has filed said certificate(s) for a tax deed to be issued thereon. The certificate number(s), year(s) of issuance, the description of the property and the name(s) in which it was assessed are as follows:

Certificate Number: 24-19429 Year of Issuance 2024 Description of Property LOT 7, BLOCK 16, UNIT 4, SECTION 14, TOWNSHIP 44 SOUTH, RANGE 27 EAST, LEHIGH ACRES, ACCORDING TO THE MAP OR PLAT THEREOF ON FILE IN THE OFFICE OF THE CLERK OF THE CIRCUIT COURT RECORDED IN PLAT BOOK 15, PAGE 16, PUBLIC RECORDS OF LEE COUNTY, FLORIDA. Strap Number 14-44-27-04-00016.0070

Names in which assessed:
JACQUES H DESIR

All of said property being in the County of Lee, State of Florida. Unless such certificate(s) shall be redeemed according to the law the property described in such certificate(s) will be sold to the highest bidder online at www.lee.realtaxdeed.com on 12/01/2026 at 10:00 am, by Kevin C. Karnes, Lee County Clerk of the Circuit Court & Comptroller.

October 9, 16, 23, 30, 2026

26-04210L

SECOND INSERTION

NOTICE OF APPLICATION FOR TAX DEED
Section 197.512 F.S.

Tax Deed #:2026000633

NOTICE IS HEREBY GIVEN that Savvy FL LLC First Horizon Collateral Assignee the holder of the following certificate(s) has filed said certificate(s) for a tax deed to be issued thereon. The certificate number(s), year(s) of issuance, the description of the property and the name(s) in which it was assessed are as follows:

Certificate Number: 24-19428 Year of Issuance 2024 Description of Property LOT 6, BLOCK 16, UNIT 4, SECTION 14, TOWNSHIP 44 SOUTH, RANGE 27 EAST, LEHIGH ACRES, ACCORDING TO THE MAP OR PLAT THEREOF ON FILE IN THE OFFICE OF THE CLERK OF THE CIRCUIT COURT RECORDED IN PLAT BOOK 15, PAGE 16, PUBLIC RECORDS OF LEE COUNTY, FLORIDA. Strap Number 14-44-27-04-00016.0060

Names in which assessed:
JACQUES H DESIR

All of said property being in the County of Lee, State of Florida. Unless such certificate(s) shall be redeemed according to the law the property described in such certificate(s) will be sold to the highest bidder online at www.lee.realtaxdeed.com on 12/01/2026 at 10:00 am, by Kevin C. Karnes, Lee County Clerk of the Circuit Court & Comptroller.

October 9, 16, 23, 30, 2026

26-04209L

SUBSCRIBE TO THE BUSINESS OBSERVER
Call: (941) 362-4848 or go to: www.businessobserverfl.com
Business Observer
LV4769

--- ESTATE ---

SECOND INSERTION

NOTICE TO CREDITORS
IN THE CIRCUIT COURT FOR LEE COUNTY, FLORIDA
PROBATE DIVISION
File No. 26-CP-2935
Division PROBATE
IN RE: ESTATE OF
CARMEN A. FULKERSON
a/k/a
CARMEN ALICIA FULKERSON
Deceased.

The administration of the estate of Carmen A. Fulkerson a/k/a Carmen Alicia Fulkerson, deceased, whose date of death was July 29, 2026, is pending in the Circuit Court for Lee County, Florida, Probate Division, the address of which is P.O. Box 9346, Fort Myers, FL 33902. The names and addresses of the personal representative and the personal representative's attorney are set forth below.

All creditors of the decedent and other persons having claims or demands against decedent's estate on whom a copy of this notice is required to be served must file their claims with this court ON OR BEFORE THE LATER OF 3 MONTHS AFTER THE TIME OF THE FIRST PUBLICATION OF THIS NOTICE OR 30 DAYS AFTER THE DATE OF SERVICE OF A COPY OF THIS NOTICE ON THEM.

All other creditors of the decedent and other persons having claims or demands against decedent's estate must file their claims with this court WITHIN 3 MONTHS AFTER THE DATE OF THE FIRST PUBLICATION OF THIS NOTICE.

The personal representative has no duty to discover whether any property held at the time of the decedent's death by the decedent or the decedent's surviving spouse is property to which the Florida Uniform Disposition of Community Property Rights at Death Act as described in ss. 732.216-732.228, Florida Statutes, applies, or may apply, unless a written demand is made by a creditor as specified under s. 732.2211, Florida Statutes. The written demand must be filed with the clerk.

ALL CLAIMS NOT FILED WITHIN THE TIME PERIODS SET FORTH IN FLORIDA STATUTES SECTION 733.702 WILL BE FOREVER BARRED.

NOTWITHSTANDING THE TIME PERIODS SET FORTH ABOVE, ANY CLAIM FILED TWO (2) YEARS OR MORE AFTER THE DECEDENT'S DATE OF DEATH IS BARRED.

The date of first publication of this notice is October 9, 2026.

Personal Representative:
John David Fulkerson
1237 Woodbrook Court
Reston, Virginia 20194
Attorney for Personal Representative:
Michael B. Hill
Attorney
Florida Bar Number: 547824
Sheppard Law Firm, P.A.
9100 College Pointe Court
Fort Myers, FL 33919
Telephone: (239) 334-1141
Fax: (239) 334-3965
E-Mail: hill@sbshlaw.com
Secondary E-Mail:
kfoell@sbshlaw.com
October 9, 16, 2026 26-04309L

SECOND INSERTION

NOTICE TO CREDITORS
IN THE CIRCUIT COURT OF THE TWENTIETH JUDICIAL CIRCUIT IN AND FOR LEE COUNTY, FLORIDA
PROBATE DIVISION
Case No.: 26-CP-002781
IN RE: ESTATE OF
SCOT HOWARD KLINGENMEIER,
Deceased.

The administration of the estate of SCOT HOWARD KLINGENMEIER, deceased, whose date of death was July 19, 2026, is pending in the Circuit Court for Lee County, Florida, Probate Division, the address of which is 1700 Monroe Street, Fort Myers, FL 33901. The file number of the estate is 26-CP-002781. The names and addresses of the personal representative and the personal representative's attorney are set forth below.

All creditors of the decedent and other persons having claims or demands against decedent's estate on whom a copy of this notice is required to be served must file their claims with this court ON OR BEFORE THE LATER OF THE DATE THAT IS 3 MONTHS AFTER THE TIME OF THE FIRST PUBLICATION OF THIS NOTICE OR 30 DAYS AFTER THE DATE OF SERVICE OF A COPY OF THIS NOTICE ON THEM.

All other creditors of the decedent and other persons having claims or demands against decedent's estate must file their claims with this court WITHIN 3 MONTHS AFTER THE DATE OF THE FIRST PUBLICATION OF THIS NOTICE.

A personal representative or curator has no duty to discover whether any property held at the time of the decedent's death by the decedent or the decedent's surviving spouse is property to which the Florida Uniform Disposition of Community Property Rights at Death Act as described in ss. 732.216-732.228, Florida Statutes, applies, or may apply, unless a written demand is made by a creditor as specified under section 732.2211, Florida Statutes. The written demand must be filed with the clerk.

ALL CLAIMS NOT FILED WITHIN THE TIME PERIODS SET FORTH IN FLORIDA STATUTES SECTION 733.702 WILL BE FOREVER BARRED.

NOTWITHSTANDING THE TIME PERIODS SET FORTH ABOVE, ANY CLAIM FILED TWO (2) YEARS OR MORE AFTER THE DECEDENT'S DATE OF DEATH IS BARRED.

The date of first publication of this notice is October 9, 2026.

Personal Representative:
LESLI RENEE KLINGENMEIER
942 Tarry Lane
Amherst, Ohio 44001
Attorney for Personal Representative:
Gregory J. Nussbickel, Esquire
Florida Bar No.: 580643
The Nussbickel Law Firm P.A
12487 Brantley Commons Court
Fort Myers, Florida 33907
Telephone: (239) 900-WILL (9455)
E-Mail: Greg@Will.Estate
Secondary E-Mail:
Christine@Will.Estate
October 9, 16, 2026 26-04304L

SECOND INSERTION

NOTICE TO CREDITORS
IN THE CIRCUIT COURT FOR THE TWENTIETH JUDICIAL CIRCUIT IN AND FOR LEE COUNTY, FLORIDA
DIVISION: PROBATE
FILE NO. 26-CP-002673
IN RE: ESTATE OF
EDWARD WILLIAM NELSEN,
a/k/a
EDWARD W. NELSEN,
Deceased.

The administration of the estate of EDWARD WILLIAM NELSEN, also known as EDWARD W. NELSEN, deceased, whose date of death was June 26, 2026, is pending in the Circuit Court for Lee County, Florida, Probate Division, the address of which is Lee County Circuit Court, 1700 Monroe Street, Fort Myers, FL 33901. The names and addresses of the personal representative and the personal representative's attorney are set forth below.

All creditors of the decedent and other persons having claims or demands against decedent's estate on whom a copy of this notice is required to be served must file their claims with this court ON OR BEFORE THE LATER OF 3 MONTHS AFTER THE TIME OF THE FIRST PUBLICATION OF THIS NOTICE OR 30 DAYS AFTER THE DATE OF SERVICE OF A COPY OF THIS NOTICE ON THEM.

All other creditors of the decedent and other persons having claims or demands against decedent's estate must file their claims with this court WITHIN 3 MONTHS AFTER THE TIME OF THE FIRST PUBLICATION OF THIS NOTICE.

A personal representative or curator has no duty to discover whether any property held at the time of the decedent's death by the decedent or the decedent's surviving spouse is property to which the Florida Uniform Disposition of Community Property Rights at Death Act as described in ss. 732.216–732.228, applies, or may apply, unless a written demand is made by a creditor as specified under s. 732.2211, Florida Statutes. The written demand must be filed with the clerk.

ALL CLAIMS NOT FILED WITHIN THE TIME PERIODS SET FORTH IN FLORIDA STATUTES SECTION 733.702 WILL BE FOREVER BARRED.

NOTWITHSTANDING THE TIME PERIODS SET FORTH ABOVE, ANY CLAIM FILED TWO (2) YEARS OR MORE AFTER THE DECEDENT'S DATE OF DEATH IS BARRED.

The date of first publication of this notice is October 9, 2026.

Personal Representative:
ERIC PAUL NELSEN
216 Ackerman Avenue
Emerson, New Jersey 07630-1562
Attorney for Personal Representative:
GREGORY J. NUSSBICKEL, Esquire
Florida Bar Number: 0580643
The Nussbickel Law Firm P.A.
12487 Brantley Commons Court
Fort Myers, Florida 33907
Telephone: (239) 900-WILL (9455)
E-Mail: Greg@Will.Estate
Christine@Will.Estate
Assist@Will.Estate
October 9, 16, 2026 26-04305L

SECOND INSERTION

NOTICE TO CREDITORS
IN THE CIRCUIT COURT FOR LEE COUNTY, FLORIDA
PROBATE DIVISION
File No. 2026-CP-2963
Division Probate
IN RE: ESTATE OF
MARY MARGARET SCHREIBER
Deceased.

The administration of the estate of Mary Margaret Schreiber, deceased, whose date of death was June 26, 2026, is pending in the Circuit Court for Lee County, Florida, Probate Division, the address of which is 1700 Monroe Street, Fort Myers, FL 33901. The names and addresses of the personal representative and the personal representative's attorney are set forth below.

All creditors of the decedent and other persons having claims or demands against decedent's estate on whom a copy of this notice is required to be served must file their claims with this court ON OR BEFORE THE LATER OF 3 MONTHS AFTER THE TIME OF THE FIRST PUBLICATION OF THIS NOTICE OR 30 DAYS AFTER THE DATE OF SERVICE OF A COPY OF THIS NOTICE ON THEM.

All other creditors of the decedent and other persons having claims or demands against decedent's estate must file their claims with this court WITHIN 3 MONTHS AFTER THE DATE OF THE FIRST PUBLICATION OF THIS NOTICE.

The personal representative has no duty to discover whether any property held at the time of the decedent's death by the decedent or the decedent's surviving spouse is property to which the Florida Uniform Disposition of Community Property Rights at Death Act as described in ss. 732.216-732.228, Florida Statutes, applies, or may apply, unless a written demand is made by a creditor as specified under s. 732.2211, Florida Statutes. The written demand must be filed with the clerk.

ALL CLAIMS NOT FILED WITHIN THE TIME PERIODS SET FORTH IN FLORIDA STATUTES SECTION 733.702 WILL BE FOREVER BARRED.

NOTWITHSTANDING THE TIME PERIODS SET FORTH ABOVE, ANY CLAIM FILED TWO (2) YEARS OR MORE AFTER THE DECEDENT'S DATE OF DEATH IS BARRED.

The date of first publication of this notice is October 9, 2026.

Laurie R. Quigley,
Personal Representative
14909 American Eagle Court
Fort Myers, FL 33912
Haylee N. Blessing
Florida Bar No. 1059314
HENDERSON, FRANKLIN, STARNES & HOLT, P.A.
Attorney for Personal Representative
3451 Bonita Bay Blvd., Suite 206
Bonita Springs, FL 34134
Tel: (239) 344-1100
Fax: (239) 344-1200
E-Mail: haylee.blessing@henlaw.com
Secondary E-Mail:
sandee.fields@henlaw.com
October 9, 16, 2026 26-04310L

SECOND INSERTION

NOTICE TO CREDITORS
IN THE CIRCUIT COURT FOR LEE COUNTY, FLORIDA
PROBATE DIVISION
File No. 2026-CP-002777
IN RE: ESTATE OF
JUNE E. DAVIS,
Deceased.

The administration of the estate of JUNE E. DAVIS, deceased, whose date of death was May 17, 2026, is pending in the Circuit Court for Lee County, Florida, Probate Division, the address of which is 2075 Martin Luther King Jr. Blvd., 2nd Floor, Fort Myers, Florida 33901. The names and addresses of the personal representative and the personal representative's attorney are set forth below.

All creditors of the decedent and other persons having claims or demands against decedent's estate, on whom a copy of this notice is required to be served, must file their claims with this court ON OR BEFORE THE LATER OF 3 MONTHS AFTER THE TIME OF THE FIRST PUBLICATION OF THIS NOTICE OR 30 DAYS AFTER THE DATE OF SERVICE OF A COPY OF THIS NOTICE ON THEM.

All other creditors of the decedent and other persons having claims or demands against decedent's estate must file their claims with this court WITHIN 3 MONTHS AFTER THE DATE OF THE FIRST PUBLICATION OF THIS NOTICE.

The personal representative has no duty to discover whether any property held at the time of the decedent's death by the decedent or the decedent's surviving spouse is property to which the Florida Uniform Disposition of Community Property Rights at Death Act as described in Section 732.216—732.228, applies, or may apply, unless a written demand is made by a creditor as specified under Section 732.2211, Florida Statutes.

ALL CLAIMS NOT FILED WITHIN THE TIME PERIODS SET FORTH IN FLORIDA STATUTES SECTION 733.702 WILL BE FOREVER BARRED.

NOTWITHSTANDING THE TIME PERIOD SET FORTH ABOVE, ANY CLAIM FILED TWO (2) YEARS OR MORE AFTER THE DECEDENT'S DATE OF DEATH IS BARRED.

The date of first publication of this notice is: October 9, 2026.

DocuSigned by: Gary L. Davis
GARY L. DAVIS
Personal Representative
5224 Estero Blvd.
Fort Myers Beach, FL 33931
/s/ Garrett C. Reuter, Jr.
Garrett C. Reuter, Jr.
Attorney for Petitioner
Florida Bar Number: 79061
Husch Blackwell LLP
999 Vanderbilt Beach Road,
Suite 200
Naples, Florida 34108
Telephone: (314) 345-6167
E-Mail:
garrett.reuter@huschblackwell.com
HB: 4931-8157-7673.2
October 9, 16, 2026 26-04279L

SECOND INSERTION

NOTICE TO CREDITORS
IN THE CIRCUIT COURT FOR LEE COUNTY, FLORIDA
PROBATE DIVISION
File No. 2026-CP-002495
IN RE: ESTATE OF
SEAN CARTER FAHY,
Deceased.

The administration of the Estate of Sean Carter Fahy, deceased, whose date of death was April 14, 2026, is pending in the Circuit Court for Lee County, Florida, Probate Division, the address of which is 2075 Martin Luther King Jr. Boulevard, 2nd Floor, Fort Myers, Florida 33901. The names and addresses of the Personal Representative and the Personal Representative's attorney are set forth below.

All creditors of the Decedent and other persons having claims or demands against Decedent's Estate on whom a copy of this notice is required to be served must file their claims with this Court ON OR BEFORE THE LATER OF 3 MONTHS AFTER THE TIME OF THE FIRST PUBLICATION OF THIS NOTICE OR 30 DAYS AFTER THE DATE OF SERVICE OF A COPY OF THIS NOTICE ON THEM.

The Personal Representative has no duty to discover whether any property held at the time of the Decedent's death by the Decedent or the Decedent's surviving spouse is property to which the Florida Uniform Disposition of Community Property Rights at Death Act as described in ss. 732.216-732.228, Florida Statutes, applies, or may apply, unless a written demand is made by a creditor as specified under s. 732.2211, Florida Statutes.

All other creditors of the Decedent and other persons having claims or demands against Decedent's Estate must file their claims with this Court WITHIN 3 MONTHS AFTER THE DATE OF THE FIRST PUBLICATION OF THIS NOTICE.

ALL CLAIMS NOT FILED WITHIN THE TIME PERIODS SET FORTH IN FLORIDA STATUTES SECTION 733.702 WILL BE FOREVER BARRED.

NOTWITHSTANDING THE TIME PERIODS SET FORTH ABOVE, ANY CLAIM FILED TWO (2) YEARS OR MORE AFTER THE DECEDENT'S DATE OF DEATH IS BARRED.

The date of first publication of this notice is October 9, 2026.

Personal Representative:
Laura Carter Fahy
1307 Benfield Avenue
New Bern, North Carolina 28562

Attorney for Personal Representative:
Ashly Mae Guernaccini, Esq.
Florida Bar Number: 1022329
At Cause Law Office, PLLC
314 S. Missouri Avenue, Suite 201
Clearwater, Florida 33756
Telephone: (727) 477-2255
Fax: (727) 234-8024
E-Mail: ashly@atcauselaw.com
Secondary E-Mail:
rhianna@atcauselaw.com
October 9, 16, 2026 26-04252L

SECOND INSERTION

NOTICE TO CREDITORS
IN THE CIRCUIT COURT, TWENTIETH JUDICIAL CIRCUIT, IN AND FOR LEE COUNTY, FLORIDA
PROBATE DIVISION
CASE NO.: 26-CP-002846
IN RE: ESTATE OF
TRACEY LYNN MCPHERSON,
Deceased.

The administration of the estate of TRACEY LYNN MCPHERSON, deceased, whose date of death was July 1, 2026, is pending in the Circuit Court for Lee County, Florida, Probate Division, the address of which is 1700 Monroe Street, Fort Myers, Florida 33901. The name and address of the personal representative and the personal representative's attorney are set forth below.

All creditors of the decedent and other persons having claims or demands against the decedent's estate on whom this notice is required to be served must file their claims with this court ON OR BEFORE THE LATER OF 3 MONTHS AFTER THE TIME OF THE FIRST PUBLICATION OF THIS NOTICE OR 30 DAYS AFTER THE DATE OF SERVICE OF THIS NOTICE ON THEM.

All other creditors of the decedent and other persons having claims or demands against the decedent's estate must file their claims with this court WITHIN 3 MONTHS AFTER THE DATE OF THE FIRST PUBLICATION OF THIS NOTICE.

The personal representative has no duty to discover whether any property held at the time of the decedent's death by the decedent or the decedent's surviving spouse is property to which the Florida Uniform Disposition of Community Property Rights at Death Act as described in ss. 732.216-732.228, applies, or may apply, unless a written demand is made by a creditor as specified under s. 732.2211, Florida Statutes. The written demand must be filed with the clerk.

ALL CLAIMS NOT FILED WITHIN THE TIME PERIODS SET FORTH IN FLORIDA STATUTES SECTION 733.702 WILL BE FOREVER BARRED.

NOTWITHSTANDING THE TIME PERIODS SET FORTH ABOVE, ANY CLAIM FILED TWO (2) YEARS OR MORE AFTER THE DECEDENT'S DATE OF DEATH IS BARRED.

The date of first publication of this notice is October 9, 2026.

Personal Representative:
MICHELLE E. JOHNSON
4020 Haydon Burns Place
Jacksonville, FL 32217

Attorney for Personal Representative:
ROBERT N. MILLER, ESQUIRE
Florida Bar Number: 042102
Fisher, Tousey, Leas & Ball
501 Riverside Avenue,
Suite 700
Jacksonville, Florida 32202
Telephone: (904) 356-2600
E-Mail: RMiller@fishertousey.com
Attorney for Personal Representative
October 9, 16, 2026 26-04259L

SECOND INSERTION

NOTICE TO CREDITORS
IN THE CIRCUIT COURT FOR LEE COUNTY, FLORIDA
PROBATE DIVISION
File No. 2026-CP-002707
IN RE: ESTATE OF
ADRIAN ORLANDO FRANCIS,
Deceased.

The administration of the estate of ADRIAN ORLANDO FRANCIS, deceased, whose date of death was June 13, 2026, is pending in the Circuit Court for Lee County, Florida, Probate Division, the address of which is PO Box 9346, Fort Myers, FL 33902. The names and addresses of the personal representative and the personal representative's attorney are set forth below.

All creditors of the decedent and other persons having claims or demands against decedent's estate, on whom a copy of this notice is required to be served, must file their claims with this court ON OR BEFORE THE LATER OF 3 MONTHS AFTER THE TIME OF THE FIRST PUBLICATION OF THIS NOTICE OR 30 DAYS AFTER THE DATE OF SERVICE OF A COPY OF THIS NOTICE ON THEM.

All other creditors of the decedent and other persons having claims or demands against decedent's estate must file their claims with this court WITHIN 3 MONTHS AFTER THE DATE OF THE FIRST PUBLICATION OF THIS NOTICE.

The personal representative has no duty to discover whether any property held at the time of the decedent's death by the decedent or the decedent's surviving spouse is property to which the Florida Uniform Disposition of Community Property Rights at Death Act as described in ss. 732.216-732.228, applies, or may apply, unless a written demand is made by a creditor as specified under s. 732.2211, Florida Statutes. The written demand must be filed with the clerk.

ALL CLAIMS NOT FILED WITHIN THE TIME PERIODS SET FORTH IN FLORIDA STATUTES SECTION 733.702 WILL BE FOREVER BARRED.

NOTWITHSTANDING THE TIME PERIOD SET FORTH ABOVE, ANY CLAIM FILED TWO (2) YEARS OR MORE AFTER THE DECEDENT'S DATE OF DEATH IS BARRED.

The date of first publication of this notice is: October 9, 2026.

DOUGLAS FRANCIS
Personal Representative
15700 Red Fox Run
Fort Myers, FL 33912

Robert D. Hines, Esq.
Attorney for Personal Representative
Florida Bar No. 0413550
Hines Norman Hines, P.L.
1312 W. Fletcher Avenue,
Suite B
Tampa, FL 33612
Telephone: 813-265-0100
Email: rhines@hnh-law.com
Secondary Email:
ntservice@hnh-law.com
October 9, 16, 2026 26-04257L

SECOND INSERTION

NOTICE TO CREDITORS
IN THE CIRCUIT COURT FOR LEE COUNTY, FLORIDA
PROBATE DIVISION
File No. 26-CP-002745
IN RE: ESTATE OF
KATHRYN E. SLOAN
Deceased.

The administration of the Estate of Kathryn E. Sloan, deceased, whose date of death was July 18, 2026, is pending in the Circuit Court for Lee County, Florida, Probate Division, the address of which is P.O. Box 9346, Fort Myers, FL 33902. The names and addresses of the Personal Representative and the Personal Representative's attorney are set forth below.

All creditors of the decedent and other persons having claims or demands against decedent's estate on whom a copy of this notice is required to be served must file their claims with this Court ON OR BEFORE THE LATER OF 3 MONTHS AFTER THE TIME OF THE FIRST PUBLICATION OF THIS NOTICE OR 30 DAYS AFTER THE DATE OF SERVICE OF A COPY OF THIS NOTICE ON THEM.

All other creditors of the decedent and other persons having claims or demands against decedent's estate must file their claims with this Court WITHIN 3 MONTHS AFTER THE DATE OF THE FIRST PUBLICATION OF THIS NOTICE.

The Personal Representative has no duty to discover whether any property held at the time of the decedent's death by the decedent or the decedent's surviving spouse is property to which the Florida Uniform Disposition of Community Property Rights at Death Act as described in ss. 732.216-732.228, Florida Statutes, applies, or may apply, unless a written demand is made by a creditor as specified under s. 732.2211, Florida Statutes. The written demand must be filed with the Clerk.

ALL CLAIMS NOT FILED WITHIN THE TIME PERIODS SET FORTH IN FLORIDA STATUTES SECTION 733.702 WILL BE FOREVER BARRED.

NOTWITHSTANDING THE TIME PERIODS SET FORTH ABOVE, ANY CLAIM FILED TWO (2) YEARS OR MORE AFTER THE DECEDENT'S DATE OF DEATH IS BARRED.

The date of first publication of this notice is October 9, 2026.

Personal Representative:
Cynthia Forrest
21751 Sound Way, #201
Estero, FL 33928

Attorney for Personal Representative:
Carol R. Sellers
Florida Bar Number: 893528
3525 Bonita Beach Rd.,
Suite 103
Bonita Springs, FL 34134
Telephone: (239) 992-2031
Fax: (239) 992-0723
E-Mail:
csellers@richardsonsellers.com
October 9, 16, 2026 26-04250L

Q&A

What is a public notice?

A public notice is information intended to inform citizens of government activities. The notice should be published in a forum independent of the government, readily available to the public, capable of being securely archived and verified by authenticity.

The West Orange Times carries public notices in Orange County, Florida.

LV18237_V34

--- ESTATE ---

SECOND INSERTION

NOTICE TO CREDITORS
IN THE CIRCUIT COURT OF THE TWENTIETH JUDICIAL CIRCUIT IN AND FOR LEE COUNTY, FLORIDA
PROBATE DIVISION
Case No. 26-CP-2734
Division: Probate
IN RE: ESTATE OF ANTHONY VINCENT BARBUTO, Deceased.

The administration of the estate of Anthony Vincent Barbuto, also known as Anthony Barbuto and Anthony V. Barbuto, deceased, whose date of death was May 23, 2026, is pending in the Circuit Court for Lee County, Florida, Probate Division, the address of which is Lee County Clerk of Court, Probate Division, 2075 Dr. Martin Luther King Jr. Boulevard, Fort Myers, Florida 33901. The file number is 26-CP-2734 The names and addresses of the ancillary personal representative and the personal representative's attorney are stated below.

ALL CREDITORS OF THE DECEDENT AND OTHER PERSONS HAVING CLAIMS OR DEMANDS AGAINST THE DECEDENT'S ESTATE MUST FILE THEIR CLAIMS WITH THIS COURT WITHIN THE LATER OF 3 MONTHS AFTER THE TIME OF THE FIRST PUBLICATION OF THIS NOTICE OR, AS TO A CREDITOR REQUIRED TO BE SERVED WITH A COPY OF THIS NOTICE, 30 DAYS AFTER THE DATE OF SERVICE ON THE CREDITOR.

ALL CLAIMS NOT FILED WITHIN THE TIME PERIODS SET FORTH IN SECTION 733.702, FLORIDA STATUTES, WILL BE FOREVER BARRED.

NOTWITHSTANDING THE TIME PERIODS SET FORTH ABOVE, ANY CLAIM FILED 2 YEARS OR MORE AFTER THE DECEDENT'S DATE OF DEATH IS BARRED.

The personal representative or curator has no duty to discover whether any property held at the time of the Decedent's death by the Decedent or the Decedent's surviving spouse is property to which the Florida Uniform Disposition of Community Property Rights at Death Act, as described in sections 732.216 through 732.228, Florida Statutes, applies or may apply, unless a written demand is made by a creditor as specified under section 732.2211, Florida Statutes. The written demand must be filed with the Clerk.

The date of first publication of this Notice is October 9, 2026.

ANCILLARY PERSONAL REPRESENTATIVE
Celia Schirtzer
95 Holt Avenue
Hamilton, New Jersey 08619
Respectfully submitted,
S/STEVEN DUNCAN
Steven Duncan, ESQ.
Florida Bar No. 0085850
Duncan Law Firm P.A.
10600 Chevrolet Way Ste. 213
Estero, Fl. 33928
Telephone: 239-405-6848
Primary E-mail:
steven@duncanlawfirmpa.com
Secondary E-mail:
Attorney for Ancillary Personal Representative
October 9, 16, 2026 26-04258L

SECOND INSERTION

NOTICE TO CREDITORS
(**Summary Administration**)
IN THE CIRCUIT COURT FOR LEE COUNTY, FLORIDA
PROBATE DIVISION
File No.: 26CP-002957
Division: Probate
IN RE: ESTATE OF NANCY LEE BYERTS, a/k/a NANCY LEE SAHLER BYERTS, Deceased.

TO ALL PERSONS HAVING CLAIMS OR DEMANDS AGAINST THE ABOVE ESTATE:

You are hereby notified that an Order of Summary Administration has been entered in the Estate of Nancy Lee Byerts, a/k/a Nancy Lee Sahler Byerts, deceased, File Number 26-CP-002957, by the Circuit Court for Lee County, Florida, Probate Division, the address of which is P.O. Box 9346, Fort Myers, FL 33902-9346; that the Decedent's date of death was September 8, 2026; that the total value of the Estate is $24,100.00; and that the names and addresses of those to whom it has been assigned by such Order are:

Name Address
Michael Byerts
7921 Willow Glen Rd.
Los Angeles, CA

ALL INTERESTED PERSONS ARE NOTIFIED THAT:

All creditors of the Estate of the Decedent and persons having claims or demands against the Estate of the Decedent other than those for whom provision for full payment was made in the Order of Summary Administration must file their claims with this Court WITHIN THE TIME PERIODS SET FORTH IN SECTION 733.702 OF THE FLORIDA PROBATE CODE.

ALL CLAIMS AND DEMANDS NOT SO FILED WILL BE FOREVER BARRED.

NOTWITHSTANDING ANY OTHER APPLICABLE TIME PERIOD, ANY CLAIM FILED TWO (2) YEARS OR MORE AFTER THE DECEDENT'S DATE OF DEATH IS BARRED.

The Personal Representative or Curator has no duty to discover whether any property held at the time of the Decedent's death by the Decedent or the Decedent's surviving spouse is property to which the Florida Uniform Disposition of Community Property Rights at Death Act as described in Sections 732.216 – 732.228 applies, or may apply, unless a written demand is made by the surviving spouse or a beneficiary as specified under Section 732.2211.

The date of first publication of this Notice is October 9, 2026.

Person Giving Notice:
Michael Byerts
7921 Willow Glen Rd.
Los Angeles, CA 90046
Attorney for Person Giving Notice:
Joe C. Cuffel
Florida Bar Number: 1019964
SCHOENFELD KYLE & ASSOCIATES LLP
1380 Royal Palm Square Boulevard
Fort Myers, Florida 33919
Telephone: (239) 936-7200
Fax: (239) 936-7997
E-Mail: joec@trustska.com
4918-0905-9284, v. 1
October 9, 16, 2026 26-04255L

SECOND INSERTION

NOTICE TO CREDITORS
IN THE CIRCUIT COURT FOR LEE COUNTY, FLORIDA
PROBATE DIVISION
File No. 2026-CP-002907
Division PROBATE
IN RE: ESTATE OF GEORGE J. KEMPINSKI, N/A Deceased.

The administration of the estate of GEORGE J. KEMPINSKI, also known as N/A, deceased, whose date of death was August 18, 2026; File Number 2026-CP-002907, is pending in the Circuit Court for LEE County, Florida, Probate Division, the address of which is 2115 Second St., 2nd Fl, , Fort Myers, Flroida 33901. The names and addresses of the personal representatives and the personal representatives' attorney are set forth below.

All creditors of the decedent and other persons having claims or demands against decedent's estate, on whom a copy of this notice is required to be served, must file their claims with this court ON OR BEFORE THE LATER OF 3 MONTHS AFTER THE TIME OF THE FIRST PUBLICATION OF THIS NOTICE OR 30 DAYS AFTER THE DATE OF SERVICE OF A COPY OF THIS NOTICE ON THEM.

All other creditors of the decedent and other persons having claims or demands against decedent's estate must file their claims with this court WITHIN 3 MONTHS AFTER THE DATE OF THE FIRST PUBLICATION OF THIS NOTICE.

The personal representative has no duty to discover whether any property held at the time of the decedent's death by the decedent or the decedent's surviving spouse is property to which the Florida Uniform Disposition of Community Property Rights at Death Act as described in ss. 732.216-732.228, applies, or may apply, unless a written demand is made by a creditor as specified under s. 732.2211, Florida Statutes. The written demand must be filed with the clerk.

ALL CLAIMS NOT FILED WITHIN THE TIME PERIODS SET FORTH IN FLORIDA STATUTES SECTION 733.702 WILL BE FOREVER BARRED.

NOTWITHSTANDING THE TIME PERIOD SET FORTH ABOVE, ANY CLAIM FILED TWO (2) YEARS OR MORE AFTER THE DECEDENT'S DATE OF DEATH IS BARRED.

The date of first publication of this notice is: October 9, 2026.

Signed on this 5TH day of OCTOBER, 2026.

S/JOANNE G. READY
JOANN G. READY
Personal Representative
315 Hemlock Terrace
Mountain Top
S/DAVID ZACHARY SMITH
DAVID ZACHARY SMITH, Esq
Attorney for Personal Representative
Florida Bar No. 0968110
SMITH & SMITH GROUP, PLLC
6870 Highland Pine Cir
Ft Myers
Telephone: 5708155447
Email: losspc@gmail.com
Secondary Email: losspc@gmail.com
October 9, 16, 2026 26-04308L

SECOND INSERTION

NOTICE TO CREDITORS
IN THE CIRCUIT COURT FOR LEE COUNTY, FLORIDA
PROBATE DIVISION
File No. 26-CP-002984
Division Probate
IN RE: ESTATE OF HARRIETTE REGINA BATOR Deceased.

The administration of the estate of Harriette Regina Bator, deceased, whose date of death was August 18, 2026, is pending in the Circuit Court for Lee County, Florida, Probate Division, the address of which is 1700 Monroe St, Ft. Myers, FL 33901. The names and addresses of the personal representative and the personal representative's attorney are set forth below.

All creditors of the decedent and other persons having claims or demands against decedent's estate on whom a copy of this notice is required to be served must file their claims with this court ON OR BEFORE THE LATER OF 3 MONTHS AFTER THE TIME OF THE FIRST PUBLICATION OF THIS NOTICE OR 30 DAYS AFTER THE DATE OF SERVICE OF A COPY OF THIS NOTICE ON THEM.

All other creditors of the decedent and other persons having claims or demands against decedent's estate must file their claims with this court WITHIN 3 MONTHS AFTER THE DATE OF THE FIRST PUBLICATION OF THIS NOTICE.

The personal representative has no duty to discover whether any property held at the time of the decedent's death by the decedent or the decedent's surviving spouse is property to which the Florida Uniform Disposition of Community Property Rights at Death Act as described in ss. 732.216-732.228, Florida Statutes, applies, or may apply, unless a written demand is made by a creditor as specified under s. 732.2211, Florida Statutes. The written demand must be filed with the clerk.

ALL CLAIMS NOT FILED WITHIN THE TIME PERIODS SET FORTH IN FLORIDA STATUTES SECTION 733.702 WILL BE FOREVER BARRED.

NOTWITHSTANDING THE TIME PERIODS SET FORTH ABOVE, ANY CLAIM FILED TWO (2) YEARS OR MORE AFTER THE DECEDENT'S DATE OF DEATH IS BARRED.

The date of first publication of this notice is October 9, 2026.

Personal Representative:
Caren Bator Les
105 Orchard St
Adams, MA 01220

Attorney for Personal Representative:
Eviana J. Martin, Attorney
Florida Bar Number: 36198
Martin Law Firm, PL
3701 Del Prado Blvd S.
Cape Coral, Florida 33904
Telephone: (239) 443-1094
Fax: (941) 218-1231
E-Mail:
eviana.martin@martinlawfirm.com
October 9, 16, 2026 26-04340L

SECOND INSERTION

NOTICE TO CREDITORS
IN THE CIRCUIT COURT FOR LEE COUNTY, FLORIDA
PROBATE DIVISION
File No.: 26-CP-2778
Division: Probate
IN RE: ESTATE OF DENISE NATOLI A/K/A DENISE LYNN NATOLI, Deceased.

The administration of the Estate of Denise Natoli a/k/a Denise Lynn Natoli, deceased, whose date of death was May 3, 2026, is pending in the Circuit Court for Lee County, Florida, Probate Division, the address of which is P.O. Box 9346, Fort Myers, FL 33902-9346. The names and addresses of the Personal Representative and the Personal Representative's attorney are set forth below.

All creditors of the Decedent and other persons having claims or demands against the Decedent's Estate on whom a copy of this Notice is required to be served must file their claims with this Court WITHIN THE LATER OF 3 MONTHS AFTER THE TIME OF THE FIRST PUBLICATION OF THIS NOTICE OR 30 DAYS AFTER THE DATE OF SERVICE OF A COPY OF THIS NOTICE ON THEM.

The Personal Representative has no duty to discover whether any property held at the time of the Decedent's death by the Decedent or the Decedent's surviving spouse is property to which the Florida Uniform Disposition of Community Property Rights at Death Act as described in Sections 732.216-732.228, Florida Statutes, applies, or may apply, unless a written demand is made by a creditor as specified under Section 732.2211, Florida Statutes.

All other creditors of the Decedent and other persons having claims or demands against the Decedent's Estate must file their claims with this Court WITHIN 3 MONTHS AFTER THE DATE OF THE FIRST PUBLICATION OF THIS NOTICE.

ALL CLAIMS NOT FILED WITHIN THE TIME PERIODS SET FORTH IN SECTION 733.702 OF THE FLORIDA PROBATE CODE WILL BE FOREVER BARRED.

NOTWITHSTANDING THE TIME PERIODS SET FORTH ABOVE, ANY CLAIM FILED TWO (2) YEARS OR MORE AFTER THE DECEDENT'S DATE OF DEATH IS BARRED.

The date of first publication of this Notice is October 9, 2026.

Personal Representative:
Emily Michele Natoli
812 Jefferson Ave.
Lehigh Acres, FL 33936
Attorney for Personal Representative:
Lowell S. Schoenfeld
Florida Bar Number: 980099
SCHOENFELD KYLE & ASSOCIATES LLP
1380 Royal Palm Square Blvd.
Fort Myers, FL 33919
Telephone: (239) 936-7200
Fax: (239) 936-7997
E-Mail: lowells@trustska.com
Secondary E-Mail:
soniak@trustska.com
October 9, 16, 2026 26-04339L

SECOND INSERTION

NOTICE TO CREDITORS
IN THE CIRCUIT COURT FOR LEE COUNTY, FLORIDA
PROBATE DIVISION
File No. 2026-CP-1906
Division Probate
IN RE: ESTATE OF LUCIEN SALVANT Deceased.

The administration of the estate of Lucien Salvant, deceased, whose date of death was September 29, 2025, is pending in the Circuit Court for Lee County, Florida, Probate Division, the address of which is Lee County Courthouse, 2120 Main St, Fort Myers, FL 33901. The names and addresses of the personal representative and the personal representative's attorney are set forth below.

All creditors of the decedent and other persons having claims or demands against decedent's estate on whom a copy of this notice is required to be served must file their claims with this court ON OR BEFORE THE LATER OF 3 MONTHS AFTER THE TIME OF THE FIRST PUBLICATION OF THIS NOTICE OR 30 DAYS AFTER THE DATE OF SERVICE OF A COPY OF THIS NOTICE ON THEM.

All other creditors of the decedent and other persons having claims or demands against decedent's estate must file their claims with this court WITHIN 3 MONTHS AFTER THE DATE OF THE FIRST PUBLICATION OF THIS NOTICE.

The personal representative has no duty to discover whether any property held at the time of the decedent's death by the decedent or the decedent's surviving spouse is property to which the Florida Uniform Disposition of Community Property Rights at Death Act as described in ss. 732.216-732.228, Florida Statutes, applies, or may apply, unless a written demand is made by a creditor as specified under s. 732.2211, Florida Statutes. The written demand must be filed with the clerk.

ALL CLAIMS NOT FILED WITHIN THE TIME PERIODS SET FORTH IN FLORIDA STATUTES SECTION 733.702 WILL BE FOREVER BARRED.

NOTWITHSTANDING THE TIME PERIODS SET FORTH ABOVE, ANY CLAIM FILED TWO (2) YEARS OR MORE AFTER THE DECEDENT'S DATE OF DEATH IS BARRED.

The date of first publication of this notice is October 9, 2026.

Personal Representative:
Leah Ann Quay
28 E. 5th Street
Boyertown, Pennsylvania 19512
Attorney for Personal Representative:
Jill Burzynski, Attorney
Florida Bar Number: 744931
Burzynski Elder Law
1124 Goodlette Road
Naples, Florida 34102
Telephone: (239) 434-8557
Fax: (239) 434-8695
E-Mail: jjb@burzynskilaw.com
Secondary E-Mail:
acr@burzynskilaw.com
October 9, 16, 2026 26-04356L

SECOND INSERTION

NOTICE TO CREDITORS
IN THE CIRCUIT COURT FOR LEE COUNTY, FLORIDA
PROBATE DIVISION
File No. 26-CP-002964
Division Probate
IN RE: ESTATE OF PAMELA ANNE KEARNES Deceased.

The administration of the estate of Pamela Anne Kearnes, deceased, whose date of death was September 6, 2026, is pending in the Circuit Court for Lee County, Florida, Probate Division, the address of which is 1700 Monroe St, Ft. Myers, FL 33901. The names and addresses of the personal representative and the personal representative's attorney are set forth below.

All creditors of the decedent and other persons having claims or demands against decedent's estate on whom a copy of this notice is required to be served must file their claims with this court ON OR BEFORE THE LATER OF 3 MONTHS AFTER THE TIME OF THE FIRST PUBLICATION OF THIS NOTICE OR 30 DAYS AFTER THE DATE OF SERVICE OF A COPY OF THIS NOTICE ON THEM.

All other creditors of the decedent and other persons having claims or demands against decedent's estate must file their claims with this court WITHIN 3 MONTHS AFTER THE DATE OF THE FIRST PUBLICATION OF THIS NOTICE.

The personal representative has no duty to discover whether any property held at the time of the decedent's death by the decedent or the decedent's surviving spouse is property to which the Florida Uniform Disposition of Community Property Rights at Death Act as described in ss. 732.216-732.228, Florida Statutes, applies, or may apply, unless a written demand is made by a creditor as specified under s. 732.2211, Florida Statutes. The written demand must be filed with the clerk.

ALL CLAIMS NOT FILED WITHIN THE TIME PERIODS SET FORTH IN FLORIDA STATUTES SECTION 733.702 WILL BE FOREVER BARRED.

NOTWITHSTANDING THE TIME PERIODS SET FORTH ABOVE, ANY CLAIM FILED TWO (2) YEARS OR MORE AFTER THE DECEDENT'S DATE OF DEATH IS BARRED.

The date of first publication of this notice is October 9, 2026.

Personal Representatives:
Lori A. Kearnes
6 Seminole Road
Huntington, WV 25705

Attorney for Personal Representative:
Eviana J. Martin, Attorney
Florida Bar Number: 36198
Martin Law Firm, PL
3701 Del Prado Blvd S.
Cape Coral, Florida 33904
Telephone: (239) 443-1094
Fax: (941) 218-1231
E-Mail:
eviana.martin@martinlawfirm.com
October 9, 16, 2026 26-04330L

SECOND INSERTION

NOTICE TO CREDITORS
IN THE CIRCUIT COURT FOR LEE COUNTY, FLORIDA
PROBATE DIVISION
File No. 26-CP-002053
IN RE: ESTATE OF ERIC JON WALL Deceased.

The administration of the estate of Eric Jon Wall, deceased, whose date of death was June 19, 2024, is pending in the Circuit Court for Lee County, Florida, Probate Division, the address of which is PO BOX 9346, Fort Myers, FL 33902. The names and addresses of the personal representative and the personal representative's attorney are set forth below.

All creditors of the decedent and other persons having claims or demands against decedent's estate on whom a copy of this notice is required to be served must file their claims with this court ON OR BEFORE THE LATER OF 3 MONTHS AFTER THE TIME OF THE FIRST PUBLICATION OF THIS NOTICE OR 30 DAYS AFTER THE DATE OF SERVICE OF A COPY OF THIS NOTICE ON THEM.

All other creditors of the decedent and other persons having claims or demands against decedent's estate must file their claims with this court WITHIN 3 MONTHS AFTER THE DATE OF THE FIRST PUBLICATION OF THIS NOTICE.

The personal representative has no duty to discover whether any property held at the time of the decedent's death by the decedent or the decedent's surviving spouse is property to which the Florida Uniform Disposition of Community Property Rights at Death Act as described in ss. 732.216-732.228, Florida Statutes, applies, or may apply, unless a written demand is made by a creditor as specified under s. 732.2211, Florida Statutes. The written demand must be filed with the clerk.

ALL CLAIMS NOT FILED WITHIN THE TIME PERIODS SET FORTH IN FLORIDA STATUTES SECTION 733.702 WILL BE FOREVER BARRED.

NOTWITHSTANDING THE TIME PERIODS SET FORTH ABOVE, ANY CLAIM FILED TWO (2) YEARS OR MORE AFTER THE DECEDENT'S DATE OF DEATH IS BARRED.

The date of first publication of this notice is October 9, 2026

Personal Representative:
Irena Wall
9393 Scarlette Oak Ave
Fort Myers, Florida 33967
Attorney for Personal Representative:
/s/ Lance McKinney
Lance M. McKinney, Attorney
Florida Bar Number: 882992
Osterhout & McKinney, P.A.
3783 Seago Lane
Fort Myers, FL 33901
Telephone: (239) 939-4888
Fax: (239) 277-0601
E-Mail: lancem@omplaw.com
Secondary E-Mail:
hillaryh@omplaw.com
October 9, 16, 2026 26-04344L

SECOND INSERTION

NOTICE TO CREDITORS
IN THE CIRCUIT COURT FOR LEE COUNTY FLORIDA
PROBATE DIVISION
File Number: 26-CP-002857
IN RE: ESTATE OF MACHELLE ANN MASON Deceased.

The administration of the estate of Machelle Ann Mason, deceased, whose date of death was July 1, 2026, is pending in the Circuit Court for Lee County, Florida, Probate Division, the address of which is 2075 Martin Luther King Blvd. 2nd Floor, Ft. Myers, FL 33901. The names and addresses of the personal representative and the personal representative's attorney are set forth below.

All creditors of the decedent and other persons having claims or demands against decedent's estate on whom a copy of this notice is required to be served must file their claims with this court ON OR BEFORE THE LATER OF 3 MONTHS AFTER THE TIME OF THE FIRST PUBLICATION OF THIS NOTICE OR 30 DAYS AFTER THE DATE OF SERVICE OF A COPY OF THIS NOTICE ON THEM.

All other creditors of the decedent and other persons having claims or demands against decedent's estate must file their claims with this court WITHIN 3 MONTHS AFTER THE DATE OF THE FIRST PUBLICATION OF THIS NOTICE.

The personal representative has no duty to discover whether any property held at the time of the decedent's death by the decedent or the decedent's surviving spouse is property to which the Florida Uniform Disposition of Community Property Rights at Death Act as described in ss. 732.216-732.228, Florida Statutes, applies, or may apply, unless a written demand is made by a creditor as specified under s. 732.2211, Florida Statutes. The written demand must be filed with the clerk.

ALL CLAIMS NOT FILED WITHIN THE TIME PERIODS SET FORTH IN FLORIDA STATUTES SECTION 733.702 WILL BE FOREVER BARRED.

NOTWITHSTANDING THE TIME PERIODS SET FORTH ABOVE, ANY CLAIM FILED TWO (2) YEARS OR MORE AFTER THE DECEDENT'S DATE OF DEATH IS BARRED.

The date of first publication of this notice is October 9, 2026

Personal Representative
Raquel Fernandez
3620 SW 110th Avenue
Miami, FL 33165

Attorney for Personal Representative
Grisell M. Turnau
Bar No. 0146031
Turnau Legal P.A.
2787 E. Oakland Park Blvd.
Suite 216
Ft. Lauderdale, FL 33306
(954)908-2358
grisell@turnaulegal.com
October 9, 16, 2026 26-04280L

PUBLISH YOUR LEGAL NOTICE
Call 941-906-9386 and select the appropriate County name from the menu option
or email legal@businessobserverfl.com
FLORIDA'S NEWSPAPER FOR THE C-SUITE
Business Observer
LV20878_V28

--- ESTATE ---

SECOND INSERTION

NOTICE TO CREDITORS
IN THE CIRCUIT COURT FOR LEE COUNTY, FLORIDA
PROBATE DIVISION
File No. 26-CP-002833
Division: Probate
IN RE: ESTATE OF CHARLES WEISINGER, Deceased.

The administration of the estate of Charles Weisinger, deceased, whose date of death was August 3, 2026, is pending in the Circuit Court for Lee County, Florida, Probate Division, the address of which is P.O. Box 9346, Fort Myers, FL 33902. The names and addresses of the personal representative and the personal representative's attorney are set forth below.

All creditors of the decedent and other persons having claims or demands against decedent's estate on whom a copy of this notice is required to be served must file their claims with this court ON OR BEFORE THE LATER OF 3 MONTHS AFTER THE TIME OF THE FIRST PUBLICATION OF THIS NOTICE OR 30 DAYS AFTER THE DATE OF SERVICE OF A COPY OF THIS NOTICE ON THEM.

All other creditors of the decedent and other persons having claims or demands against decedent's estate must file their claims with this court WITHIN 3 MONTHS AFTER THE DATE OF THE FIRST PUBLICATION OF THIS NOTICE.

The personal representative has no duty to discover whether any property held at the time of the decedent's death by the decedent or the decedent's surviving spouse is property to which the Florida Uniform Disposition of Community Property Rights at Death Act as described in ss. 732.216-732.228, Florida Statutes, applies, or may apply, unless a written demand is made by a creditor as specified under s. 732.2211, Florida Statutes. The written demand must be filed with the clerk.

ALL CLAIMS NOT FILED WITHIN THE TIME PERIODS SET FORTH IN FLORIDA STATUTES SECTION 733.702 WILL BE FOREVER BARRED.

NOTWITHSTANDING THE TIME PERIODS SET FORTH ABOVE, ANY CLAIM FILED TWO (2) YEARS OR MORE AFTER THE DECEDENT'S DATE OF DEATH IS BARRED.

The date of first publication of this notice is October 9, 2026.

Personal Representative:
/s/ Max Jaime Weisinger
Max Jaime Weisinger
7262 Heaven Lane
Fort Myers, FL 33908
Attorney for Personal Representative:
/s/ Jennifer Hammond for
Lowell S. Schoenfeld
Attorney for Personal Representative
Florida Bar Number: 980099
SCHOENFELD KYLE & ASSOCIATES LLP
1380 Royal Palm Square Blvd.
Fort Myers, FL 33919
Telephone: (239) 936-7200
Fax: (239) 936-7997
E-Mail: lowells@trustska.com
October 9, 16, 2026 26-04276L

SECOND INSERTION

NOTICE TO CREDITORS
IN THE CIRCUIT COURT FOR LEE COUNTY, FLORIDA
PROBATE DIVISION
File No. 26-CP-2347
Division Probate
IN RE: ESTATE OF CHARLES A. PICCIANO Deceased.

The administration of the estate of Charles A. Picciano, deceased, whose date of death was June 1, 2026, is pending in the Circuit Court for Lee County, Florida, Probate Division, the address of which is P.O. Box 9346, Fort Myers, FL 33902. The names and addresses of the personal representative and the personal representative's attorney are set forth below.

All creditors of the decedent and other persons having claims or demands against decedent's estate on whom a copy of this notice is required to be served must file their claims with this court ON OR BEFORE THE LATER OF 3 MONTHS AFTER THE TIME OF THE FIRST PUBLICATION OF THIS NOTICE OR 30 DAYS AFTER THE DATE OF SERVICE OF A COPY OF THIS NOTICE ON THEM.

All other creditors of the decedent and other persons having claims or demands against decedent's estate must file their claims with this court WITHIN 3 MONTHS AFTER THE DATE OF THE FIRST PUBLICATION OF THIS NOTICE.

The personal representative has no duty to discover whether any property held at the time of the decedent's death by the decedent or the decedent's surviving spouse is property to which the Florida Uniform Disposition of Community Property Rights at Death Act as described in ss. 732.216-732.228, Florida Statutes, applies, or may apply, unless a written demand is made by a creditor as specified under s. 732.2211, Florida Statutes. The written demand must be filed with the clerk.

ALL CLAIMS NOT FILED WITHIN THE TIME PERIODS SET FORTH IN FLORIDA STATUTES SECTION 733.702 WILL BE FOREVER BARRED.

NOTWITHSTANDING THE TIME PERIODS SET FORTH ABOVE, ANY CLAIM FILED TWO (2) YEARS OR MORE AFTER THE DECEDENT'S DATE OF DEATH IS BARRED.

The date of first publication of this notice is October 9, 2026.

Personal Representative:
Emilia Aki
10141 Verona Lakes Lane
Miromar Lakes, Florida 33913
Attorney for Personal Representative:
Jennifer J. Hammond - Attorney
Florida Bar Number: 121531
SCHOENFELD KYLE & ASSOCIATES LLP
1380 Royal Palm Square
Fort Myers, FL 33919
Telephone: (239) 936-7200
Fax: (239) 936-7997
E-Mail: jenniferh@trustska.com
Secondary E-Mail:
carolg@trustska.com
4922-3517-2283, v. 1
October 9, 16, 2026 26-04277L

SECOND INSERTION

NOTICE TO CREDITORS
IN THE CIRCUIT COURT FOR THE TWENTIETH JUDICIAL CIRCUIT IN AND FOR LEE COUNTY, FLORIDA
DIVISION: PROBATE
FILE NO. 2025-CP-003924
IN RE: ESTATE OF KENNETH W. KING, Deceased.

The administration of the estate of KENNETH W. KING, deceased, whose date of death was July 8, 2025, is pending in the Circuit Court for Lee County, Florida, Probate Division, the address of which is Lee County Circuit Court, 2075 Martin Luther King Jr. Blvd, 2nd Floor, Fort Myers, FL 33901. The names and addresses of the personal representative and the personal representative's attorney are set forth below.

All creditors of the decedent and other persons having claims or demands against decedent's estate on whom a copy of this notice is required to be served must file their claims with this court ON OR BEFORE THE LATER OF 3 MONTHS AFTER THE TIME OF THE FIRST PUBLICATION OF THIS NOTICE OR 30 DAYS AFTER THE DATE OF SERVICE OF A COPY OF THIS NOTICE ON THEM.

All other creditors of the decedent and other persons having claims or demands against decedent's estate must file their claims with this court WITHIN 3 MONTHS AFTER THE DATE OF THE FIRST PUBLICATION OF THIS NOTICE.

A personal representative or curator has no duty to discover whether any property held at the time of the decedent's death by the decedent or the decedent's surviving spouse is property to which the Florida Uniform Disposition of Community Property Rights at Death Act as described in ss. 732.216–732.228, applies, or may apply, unless a written demand is made by a creditor as specified under s. 732.2211, Florida Statutes. The written demand must be filed with the clerk.

ALL CLAIMS NOT FILED WITHIN THE TIME PERIODS SET FORTH IN FLORIDA STATUTES SECTION 733.702 WILL BE FOREVER BARRED.

NOTWITHSTANDING THE TIME PERIODS SET FORTH ABOVE, ANY CLAIM FILED TWO (2) YEARS OR MORE AFTER THE DECEDENT'S DATE OF DEATH IS BARRED.

The date of first publication of this notice is October 9, 2026.

Personal Representative:
SANDRA J. KING
5400 Tice Street, Apt. No. 341,
Fort Myers, Florida 33905
Attorney for Personal Representative:
GREGORY J. NUSSBICKEL, Esquire
Florida Bar Number: 0580643
The Nussbickel Law Firm P.A.
12487 Brantley Commons Court
Fort Myers, Florida 33907
Telephone: (239) 900-WILL (9455)
E-Mail: Greg@Will.Estate
Secondary E-Mail:
Christine@Will.Estate
Secondary E-Mail: assist@will.estate
October 9, 16, 2026 26-04306L

SECOND INSERTION

NOTICE TO CREDITORS
IN THE CIRCUIT COURT FOR LEE COUNTY, FLORIDA
PROBATE DIVISION
File No. 2026-CP-002355
IN RE: ESTATE OF RENATE ANETSBERGER, Deceased

The administration of the estate of RENATE ANETSBERGER, deceased, whose date of death was August 27, 2025, is pending in the Circuit Court for Lee County, Florida, Probate Division, the address of which is 1700 Monroe Street, Fort Myers, Florida 33901. The names and addresses of the Personal Representative and the Personal Representative's attorney are set forth below.

All creditors of the Decedent and other persons having claims or demands against Decedent's estate on whom a copy of this notice is required to be served must file their claims with this Court ON OR BEFORE THE LATER OF 3 MONTHS AFTER THE TIME OF THE FIRST PUBLICATION OF THIS NOTICE OR 30 DAYS AFTER THE DATE OF SERVICE OF A COPY OF THIS NOTICE ON THEM.

All other creditors of Decedent and other persons having claims or demands against Decedent's estate must file their claims with this Court WITHIN 3 MONTHS AFTER THE DATE OF THE FIRST PUBLICATION OF THIS NOTICE.

The Personal Representative has no duty to discover whether any property held at the time of the Decedent's death by the Decedent or the Decedent's surviving spouse is property to which the Florida Uniform Disposition of Community Property Rights at Death Act as described in ss. 732.216-732.228, applies, or may apply, unless a written demand is made by a creditor as specified under s. 732.2211, Florida Statutes.

ALL CLAIMS NOT FILED WITHIN THE TIME PERIODS SET FORTH IN FLORIDA STATUTES SECTION 733.702 WILL BE FOREVER BARRED.

NOTWITHSTANDING THE TIME PERIOD SET FORTH ABOVE, ANY CLAIM FILED TWO (2) YEARS OR MORE AFTER THE DECEDENT'S DATE OF DEATH IS BARRED.

The date of first publication of this Notice is October 9, 2026.

Personal Representative:
ROBERT ANETSBERGER
4904 West Wonder Lake Drive
Wonder Lake, IL 60097

Attorney for Personal Representative:
ROBERT H. EARDLEY, ESQ.
Florida Bar No. 500631
Law Office of Robert H. Eardley, P.A.
1415 Panther Lane, Suite 108
Naples, FL 34109
Telephone: (239) 591-6776
Email: robert@swflorida-law.com
October 9, 16, 2026 26-04327L

SECOND INSERTION

NOTICE TO CREDITORS
IN THE CIRCUIT COURT FOR LEE COUNTY, FLORIDA
PROBATE DIVISION
File No. 26-CP-2841
Division - Probate
IN RE: ESTATE OF ROSEMARY DONACHIE Deceased.

The administration of the estate of Rosemary Donachie deceased, whose date of death was August 10, 2026, is pending in the Circuit Court for Lee County, Florida, Probate Division, the address of which is 1700 Monroe Street, Fort Myers, Florida 33901. The names and addresses of the Personal Representative and the Personal Representative's attorney are set forth below.

All creditors of the decedent and other persons having claims or demands against decedent's estate on whom a copy of this notice is required to be served must file their claims with this court WITHIN THE LATER OF 3 MONTHS AFTER THE TIME OF THE FIRST PUBLICATION OF THIS NOTICE OR 30 DAYS AFTER THE DATE OF SERVICE OF A COPY OF THIS NOTICE ON THEM.

The personal representative has no duty to discover whether any property held at the time of the decedent's death by the decedent or the decedent's surviving spouse is property to which the Florida Uniform Disposition of Community Property Rights at Death Act as described in ss. 732.216-732.228, Florida Statutes, applies, or may apply, unless a written demand is made by a creditor as specified under s. 732.2211, Florida Statutes.

All other creditors of the decedent and other persons having claims or demands against decedent's estate must file their claims with this court WITHIN 3 MONTHS AFTER THE DATE OF THE FIRST PUBLICATION OF THIS NOTICE.

ALL CLAIMS NOT FILED WITHIN THE TIME PERIOD SET FORTH IN SECTION 733.702 OF THE FLORIDA PROBATE CODE WILL BE FOREVER BARRED.

NOTWITHSTANDING THE TIME PERIODS SET FORTH ABOVE, ANY CLAIM FILED TWO (2) YEARS OR MORE AFTER THE DECEDENT'S DATE OF DEATH IS BARRED.

The date of first publication of this notice is October 9, 2026.

Richard O'Brien,
Personal Representative
8589 Via Lungomare Circle, Unit 306
Estero, FL 33928
Dawn L. Drellos-Thompson
Attorney for Personal Representative
Richard O'Brien
Florida Bar No. 22503
9990 Coconut Road, Suite 303
Bonita Springs, FL 34135
Phone: 239-390-1295
Email: dawn@compass.legal
October 9, 16, 2026 26-04251L

SECOND INSERTION

NOTICE TO CREDITORS
IN THE CIRCUIT COURT FOR LEE COUNTY, FLORIDA
PROBATE DIVISION
File No. 26-CP-2893
Division PROBATE
IN RE: ESTATE OF ANTHONY F. GLEASON, SR., a/k/a ANTHONY F. GLEASON Deceased.

The administration of the estate of ANTHONY F. GLEASON, SR., a/k/a ANTHONY F. GLEASON, deceased, whose date of death was June 13, 2026, is pending in the Circuit Court for Lee County, Florida, Probate Division, the address of which is 2075 Martin Luther King Jr. Boulevard, 2nd Floor, Fort Myers, Florida 33901. The names and addresses of the Co-Personal Representatives and the Co-Personal Representatives' attorney are set forth below.

All creditors of the decedent and other persons having claims or demands against decedent's estate on whom a copy of this notice is required to be served must file their claims with this court ON OR BEFORE THE LATER OF 3 MONTHS AFTER THE TIME OF THE FIRST PUBLICATION OF THIS NOTICE OR 30 DAYS AFTER THE DATE OF SERVICE OF A COPY OF THIS NOTICE ON THEM.

All other creditors of the decedent and other persons having claims or demands against decedent's estate must file their claims with this court WITHIN 3 MONTHS AFTER THE DATE OF THE FIRST PUBLICATION OF THIS NOTICE.

The Co-Personal Representatives has no duty to discover whether any property held at the time of the decedent's death by the decedent or the decedent's surviving spouse is property to which the Florida Uniform Disposition of Community Property Rights at Death Act as described in ss. 732.216-732.228, Florida Statutes, applies, or may apply, unless a written demand is made by a creditor as specified under s. 732.2211, Florida Statutes. The written demand must be filed with the clerk.

ALL CLAIMS NOT FILED WITHIN THE TIME PERIODS SET FORTH IN FLORIDA STATUTES SECTION 733.702 WILL BE FOREVER BARRED.

NOTWITHSTANDING THE TIME PERIODS SET FORTH ABOVE, ANY CLAIM FILED TWO (2) YEARS OR MORE AFTER THE DECEDENT'S DATE OF DEATH IS BARRED.

The date of first publication of this notice is October 9, 2026.

Co-Personal Representatives:
ANTHONY F. GLEASON, II
1091 Westhampton Road
Florence, Massachusetts 01062
PATRICK D. GLEASON, II
63 Harvest Woods Road
Rockfall, Connecticut 06481
MAUREEN P. GLEASON, a/k/a MAUREEN P. CHASE
2432 NW 1st Street
Cape Coral, Florida 33993

Attorney for Co-Personal Representatives:
Conrad Willkomm, Esq.
Florida Bar Number: 697338
Law Office of Conrad Willkomm P.A.
3201 Tamiami Trail North,
Second Floor
Naples, Florida 34103
Telephone: (239) 262-5303
Fax: (239) 262-6030
E-Mail: conrad@swfloridalaw.com
Secondary E-Mail:
vic@swfloridalaw.com
October 9, 16, 2026 26-04278L

SECOND INSERTION

NOTICE TO CREDITORS
IN THE CIRCUIT COURT OF THE TWENTIETH JUDICIAL CIRCUIT IN AND FOR LEE COUNTY, FLORIDA
PROBATE DIVISION
File No. 26-CP-002469
IN RE: ESTATE OF RICHARD LOUIS WILKEN Deceased.

The administration of the estate of RICHARD LOUIS WILKEN, deceased, whose date of death was March 25, 2026, is pending in the Circuit Court for Lee County, Florida, Probate Division, the address of which is 1700 Monroe Street, Fort Myers, FL 33901. The names and addresses of the personal representative and the personal representative's attorney are set forth below.

All creditors of the decedent and other persons having claims or demands against decedent's estate, on whom a copy of this notice is required to be served, must file their claims with this court ON OR BEFORE THE LATER OF 3 MONTHS AFTER THE TIME OF THE FIRST PUBLICATION OF THIS NOTICE OR 30 DAYS AFTER THE DATE OF SERVICE OF A COPY OF THIS NOTICE ON THEM.

All other creditors of the decedent and other persons having claims or demands against decedent's estate must file their claims with this court WITHIN 3 MONTHS AFTER THE DATE OF THE FIRST PUBLICATION OF THIS NOTICE.

ALL CLAIMS NOT FILED WITHIN THE TIME PERIODS SET FORTH IN FLORIDA STATUTES SECTION 733.702 WILL BE FOREVER BARRED.

NOTWITHSTANDING THE TIME PERIOD SET FORTH ABOVE, ANY CLAIM FILED TWO (2) YEARS OR MORE AFTER THE DECEDENT'S DATE OF DEATH IS BARRED.

The date of first publication of this notice is: October 9, 2026.

Personal Representative:
WILMA ELAINE WILKEN

Attorney for Personal Representative:
Roger E. O'Halloran
Florida Bar No. 138494
O'Halloran Legal Group, PLLC
2259 Cleveland Ave.
Fort Myers, FL 33901
Telephone: (239) 334-7212
Email: Pat@ohalloranlegalgroup.com
October 9, 16, 2026 26-04342L

SECOND INSERTION

NOTICE TO CREDITORS
IN THE CIRCUIT COURT FOR LEE COUNTY, FLORIDA
PROBATE DIVISION
CASE NO.: 26-CP-002891
IN RE: ESTATE OF: THOMAS P. MINAHAN Deceased.

The administration of the estate of THOMAS P. MINAHAN, decedent, whose date of death was April 6, 2026, is pending in the Circuit Court for Lee County, Florida, Probate Division; the address of which is Clerk of Court, 1700 Monroe Street, Fort Myers, Florida 33901. The names and addresses of the personal representative and the personal representative's attorney are set forth below.

All creditors of the decedent and other persons having claims or demands against decedent's estate on whom a copy of this notice is required to be served must file their claims with this court ON OR BEFORE THE LATER OF THREE (3) MONTHS AFTER THE TIME OF THE FIRST PUBLICATION OF THIS NOTICE OR THIRTY (30) DAYS AFTER THE DATE OF SERVICE OF A COPY OF THIS NOTICE ON THEM.

All other creditors of the decedent and other persons having claims or demands against decedent's estate must file their claims with this court WITHIN THREE (3) MONTHS AFTER THE DATE OF THE FIRST PUBLICATION OF THIS NOTICE.

ALL CLAIMS NOT FILED WITHIN THE TIME PERIODS SET FORTH IN SECTION 733.702 OF THE FLORIDA PROBATE CODE WILL BE FOREVER BARRED.

NOTWITHSTANDING THE TIME PERIODS SET FORTH ABOVE, ANY CLAIM FILED TWO (2) YEARS OR MORE AFTER THE DECEDENT'S DATE OF DEATH IS BARRED.

The date of first publication of this notice is October 9, 2026.

Personal Representative:
/s/ Gertrude Minahan
GERTRUDE MINAHAN
30 Community Way
Apt. 203
East Greenbush, NY 12061
Attorney for Personal Representative:
/s/ Stephen W. Screnci. Esq.
Stephen W. Screnci, Esq.
Stephen W. Screnci, P.A.
Florida Bar No.: 0051802
6991 N. State Road 7, Suite 201
Parkland, FL 33073
Email: sws@screncilaw.com
October 9, 16, 2026 26-04326L

SECOND INSERTION

NOTICE TO CREDITORS
IN THE CIRCUIT COURT FOR THE TWENTIETH JUDICIAL CIRCUIT IN AND FOR LEE COUNTY, FLORIDA
Probate Division
File No. 26-CP-002667
IN RE: ESTATE OF ROBERT M. SCHLEINKOFER deceased.

The administration of the testate estate of Robert M. Schleinkofer, deceased, whose date of death was April 28, 2026, File Number 26-CP-002667, is pending in the Circuit Court for Lee County, Florida, Probate Division, the address of which is Lee County Justice Center, 1700 Monroe Street, 1st Floor, PO Box 9346, Fort Myers, FL 33902. The name and address of the co-personal representative and the co-personal representative's attorney are set forth below.

ALL INTERESTED PERSONS ARE NOTIFIED THAT:

All creditors of the decedent and other persons having claims or demands against decedent's estate on whom a copy of this Notice is served must file their claims with this Court WITHIN THE LATER OF THREE MONTHS AFTER THE DATE OF THE FIRST PUBLICATION OF THIS NOTICE OR THIRTY DAYS AFTER THE DATE OF SERVICE OF A COPY OF THIS NOTICE ON THEM.

All other creditors of the decedent and persons having claims or demands against the decedent's estate must file their claims with this Court WITHIN THREE MONTHS AFTER THE DATE OF THE FIRST PUBLICATION OF THIS NOTICE.

ALL CLAIMS NOT SO FILED WILL BE FOREVER BARRED.

NOTWITHSTANDING THE TIME PERIODS SET FORTH ABOVE, ANY CLAIM FILED TWO YEARS OR MORE AFTER THE DECEDENT'S DATE OF DEATH IS BARRED.

The date of the first publication of this Notice to Creditors is October 9, 2026.

Lynne Sordelet,
Co-Personal Representative
5327 Glenrose Drive
Fort Wayne, IN 46815
Brian J. Downey, Esq.
FL Bar Number: 0017975
BARRETT McNAGNY LLP
Attorney for Personal Representative
215 E. Berry St.
Fort Wayne, IN 46802
Phone: 260-423-8871
Email: bjd@barrettlaw.com
October 9, 16, 2026 26-04275L

SECOND INSERTION

NOTICE TO CREDITORS
IN THE CIRCUIT COURT OF THE 20TH JUDICIAL CIRCUIT IN AND FOR LEE COUNTY, FLORIDA.
CASE NO.: 26-CP-002770
PROBATE DIVISION
IN RE: ROBERT PAUL DUBAY, Deceased.

The ancillary administration of the Estate of ROBERT PAUL DUBAY, deceased, whose date of death was November 24, 2025, is pending in the Circuit Court of Lee County, Florida, Probate Division, the address of which is 2075 Martin Luther King Jr. Blvd., Fort Myers, FL 33901, under Case No.: 26-CP-002770. The Estate is testate. The name and address of the Personal Representative and the Personal Representative's attorney are set forth below.

All creditors of the decedent and all other persons having claims or demands against decedent's Estate on whom a copy of this notice is required to be served must file their claims with the court WITHIN THE LATER OF 3 MONTHS AFTER THE TIME OF THE FIRST PUBLICATION OF THIS NOTICE OR 30 DAYS AFTER THE DATE OF SERVICES OF A COPY OF THIS NOTICE ON THEM.

All other creditors of the decedent and other persons having claims or demands against decedent's Estate must file their claims with this court WITHIN 3 MONTHS AFTER THE DATE OF THE FIRST PUBLICATION OF THIS NOTICE. ALL CLAIMS NOT FILED WITHIN THE TIME PERIODS SET FORTH IN SECTION 733.702 OF THE FLORIDA PROBATE CODE WILL BE FOREVER BARRED. NOTWITHSTANDING THE TIME PERIODS SET FORTH ABOVE, ANY CLAIM FILED TWO (2) YEARS OR MORE AFTER THE DECEDENT'S DEATH IS BARRED.

The date of the first publication of this notice is October 9, 2026

Personal Representative:
/s/ Tara Rae Delgado
Tara Rae Delgado
807 Mystic Drive, Apt. C505,
Cape Canaveral, FL 32920
Attorney for Personal Representative:
/s/ Jonathan S. Trabitz
JONATHAN S. TRABITZ, ESQ.
FBN: 110644
Thomas G. Sherman, P.A.
90 Almeria Avenue
Coral Gables, FL 33134
Ph: 305-448-5898 EXT 202
Email:
Jonathan@Uniontitleservices.com
October 9, 16, 2026 26-04303L

PUBLISH YOUR LEGAL NOTICE
Call 941-906-9386
and select the appropriate County name from the menu.
or email
legal@businessobserverfl.com
FLORIDA'S NEWSPAPER FOR THE C-SUITE
Business Observer
LV20878_V8

--- ACTIONS / SALES ---

SECOND INSERTION

NOTICE OF FORECLOSURE SALE
IN THE CIRCUIT COURT OF THE TWENTIETH JUDICIAL CIRCUIT IN AND FOR LEE COUNTY, FLORIDA
GENERAL JURISDICTION DIVISION
Case No. 26-CA-001751
PennyMac Loan Services, LLC,
Plaintiff, vs.
Adam Sparks, et al.,
Defendants.

NOTICE IS HEREBY GIVEN pursuant to the Final Judgment and/or Order Rescheduling Foreclosure Sale, entered in Case No. 26-CA-001751 of the Circuit Court of the TWENTIETH Judicial Circuit, in and for Lee County, Florida, wherein PennyMac Loan Services, LLC is the Plaintiff and Adam Sparks; Kelley Smith; United States of America on behalf of the Secretary of Housing and Urban Development; FIGRE Trust 2024-HE4; City of Cape Coral, Florida are the Defendants, that I will sell to the highest and best bidder for cash at, www.lee.realforeclose.com, beginning at 9:00 AM on the 19th day of November, 2026, the following described property as set forth in said Final Judgment, to wit:

LOT(S) 37 AND 38, BLOCK 2435, CAPE CORAL UNIT 34, A SUBDIVISION, ACCORDING TO THE PLAT THEREOF, AS RECORDED IN PLAT BOOK 16, PAGE(S) 74 THROUGH 86, INCLUSIVE, OF THE PUBLIC RECORDS OF LEE COUNTY, FLORIDA.

TAX ID: 01-44-23-C1-02435.0370

Any person claiming an interest in the surplus from the sale, if any, other than the property owner as of the date of the lis pendens must file a claim before the clerk reports the surplus as unclaimed.

Dated this day of 10/02/2026

Kevin Karnes
As Clerk of the Court
(SEAL) By: N Wright-Angad
As Deputy Clerk

Brock & Scott PLLC
4919 Memorial Hwy,
Suite 135
Tampa, FL 33634
Attorney for Plaintiff
File # 26-F00577
October 9, 16, 2026 26-04272L

SECOND INSERTION

NOTICE OF ACTION WITH MAILING
IN THE CIRCUIT COURT OF THE TWENTIETH JUDICIAL CIRCUIT, IN AND FOR LEE COUNTY, FLORIDA
Case No.: 25-DR-7534
Division: Family
IN THE MATTER OF THE ADOPTION OF :
ROSALINE FAITH WATSON

TO: BRITNEY RIVERA WATSON at last known address:
521 Northlake Blvd. N.
Palm Beach, F: 33408

YOU ARE HEREBY NOTIFIED that a Complaint or other related relief has been filed against you and that you are required to serve a copy of your written defenses, if any, to it on Petitioner's Counsel Timothy P. Culhane, Esq., at the Law Firm of LANDMARK LAW, located at 3949 Evans Avenue, Suite 300B, Fort Myers, Florida 33901 on or before October 14, 2026 and file the original with the clerk of this Court at Lee County Clerk of Court, 2075 Dr Martin Luther King Jr Blvd, Fort Myers, FL 33901 before service on Plaintiff's Counsels or immediately thereafter. If you fail to do so, a default may be entered against you for the relief demanded in the petition.

NOTICE OF PETITION AND HEARING TO TERMINATE PARENTAL RIGHTS PENDING ADOPTION

A petition to terminate parental rights pending adoption has been filed. A copy of the petition is served with this notice. There will be a hearing on the petition to terminate parental rights pending adoption on at before Judge Amy Hawthorne at -Court at Lee County Clerk of Court, 2075 Dr Martin Luther King Jr Blvd, Fort Myers, FL 33901 The court has set aside 15 minutes for this hearing.

UNDER SECTION 63.089, FLORIDA STATUTES, FAILURE TO TIMELY FILE A WRITTEN RESPONSE TO THIS NOTICE AND THE PETITION WITH THE COURT AND TO APPEAR AT THIS HEARING CONSTITUTES GROUNDS UPON WHICH THE COURT SHALL END ANY PARENTAL RIGHTS YOU MAY HAVE OR ASSERT REGARDING THE MINOR CHILD.

Copies of all court documents in this case, including orders, are available at the Clerk of the Circuit Court's office. You may review these documents upon request.

This matter will be ran in the Business Observer.

Dated: 09/04/2026

KEVIN C. KARNES
Clerk of the Court
(SEAL) By: J. Collins
Deputy Clerk

/s/ Timothy P. Culhane
Timothy P. Culhane
3949 Evans Avenue, Suite 300B
Fort Myers, Florida 33901
Fla. Bar No. 124657
October 9, 16, 23, 30, 2026
26-04249L

THIRD INSERTION

NOTICE OF ACTION FOR Petition for Support And Parenting Plan Unconnected With Dissolution of Marriage With Dependent or Minor
IN THE CIRCUIT COURT OF THE 20TH JUDICIAL CIRCUIT, IN AND FOR LEE COUNTY, FLORIDA
Case No.: 26-DR-006609
Judge: Hawthorne, Amy R
CARLOS GUTIERREZ,
Petitioner,
and
MELISSA A GUDELO,
Respondent.

TO: Melissa A Gudelo
250 SW 39 Terr Cape Coral, FL 33914

YOU ARE NOTIFIED that an action has been filed against you and that you are required to serve a copy of your written defenses, if any, to it on Carlos Gutierrez, whose address is 250 SW 39 Terr Cape Coral FL 33914 on or before 10/28/26, and file the original with the clerk of this Court at 1700 Monroe St Fort Myers FL 33901 before service on Petitioner or immediately thereafter. If you fail to do so, a default may be entered against you for the relief demanded in the petition.

Copies of all court documents in this case, including orders, are available at the Clerk of the Circuit Court's office. You may review these documents upon request.

You must keep the Clerk of the Circuit Court's office notified of your current address. (You may file a Designation of Current Mailing and E-Mail Address, Florida Supreme Court Approved Family Law Form 12.915). Future papers in this lawsuit will be mailed or e-mailed to the addresses on record at the clerk's office.

WARNING: Rule 12.285, Florida Family Law Rules of Procedure, requires certain automatic disclosure of documents and information. Failure to comply can result in sanctions, including dismissal or striking of pleadings.

Dated: 09/18/26.

CLERK OF THE CIRCUIT COURT
(SEAL) By: TM
{Deputy Clerk}

October 2, 9, 16, 23, 2026
26-04134L

THIRD INSERTION

NOTICE OF ACTION FOR TEMPORARY CUSTODY BY EXTENDED FAMILY
IN THE CIRCUIT COURT OF THE TWENTIETH JUDICIAL CIRCUIT IN AND FOR LEE COUNTY, FLORIDA
Case No.: 26-DR-003574
In The Interest of:
Atlas Santiago Mendoza,
Child,
Elsa E. Marte,
Petitioner
and
Elena Naomi Mendoza,
Respondent/Mother,
(unknown),
Respondent/Father

TO: Elena Naomi Mendoza
205 Cortez Drive, Port Charlotte, Florida 33980

YOU ARE NOTIFIED that an action for Petition for Temporary Custody by Extended Family has been filed against you and that you are required to serve a copy of your written defenses, if any, to it on Elsa E. Marte, whose address is 2101 McGregor Blvd. # 102, Fort Myers, FL 33901 on or before 11/09/ 2026, and file the original with the clerk of this Court at 2075 Martin Luther King Jr. Blvd., Fort Myers, FL 33901 or mail to P.O. Box 310, Fort Myers, FL 33902, before service on Petitioner or immediately thereafter. If you fail to do so, a default may be entered against you for the relief demanded in the petition.

The minor child is identified as follows:

Date of Birth
October 23, 2024
Place of Birth
Boston, Massachusetts
Physical Description of Respondent:
Age: 21
Race: White
Hair Color: Brown
Eye Color: Hazel
Approximate Height: 5'4"
Approximate Weight: 145'

Copies of all court documents in this case, including orders, are available at the Clerk of the Circuit Court's office. You may review these documents upon request.

You must keep the Clerk of the Circuit Court's office notified of your current address. (You may file Designation of Current Mailing and E-Mail Address, Florida Supreme Court Approved Family Law Form 12.915.) Future papers in this lawsuit will be mailed or e-mailed to the addresses on record at the clerk's office.

WARNING: Rule 12.285, Florida Family Law Rules of Procedure, requires certain automatic disclosure of documents and information. Failure to comply can result in sanctions, including dismissal or striking of pleadings.

Dated: 09/29/2026

KEVIN C. KARNES,
Clerk of Circuit Court
(SEAL) By: B Willey
Deputy Clerk

October 2, 9, 16, 23, 2026
26-04135L

SECOND INSERTION

RE-NOTICE OF FORECLOSURE SALE
IN THE CIRCUIT COURT FOR THE TWENTIETH JUDICIAL CIRCUIT IN AND FOR LEE COUNTY, FLORIDA
CIRCUIT CIVIL DIVISION
CASE NO.: 25-CA-002981
WILMINGTON SAVINGS FUND SOCIETY, FSB, NOT IN ITS INDIVIDUAL CAPACITY BUT SOLELY AS OWNER TRUSTEE FOR VERUS SECURITIZATION TRUST 2024-5
Plaintiff(s), vs.
NATHAN RYAN CARR; YVENS FINANCIAL 77 LLC
Defendant(s).

NOTICE IS HEREBY GIVEN THAT, pursuant to the Order Granting Motion to Cancel Foreclosure Sale entered on September 2, 2026 in the above-captioned action, the Clerk of Court will sell to the highest and best bidder for cash at www.lee.realforeclose.com in accordance with Chapter 45, Florida Statutes on the 5th day of November, 2026 at 09:00 AM on the following described property as set forth in said Final Judgment of Foreclosure or order, to wit:

LOTS 20 AND 21, BLOCK 4791, CAPE CORAL, UNIT 71, ACCORDING TO THE MAP OR PLAT THEREOF ES RECORDED IN PLAT BOOK 22, PAGE 88, PUBLIC RECORDS OF LEE COUNTY, FLORIDA.

Property address: 1824 Southwest 28th Lane, Cape Coral, FL 33914

Any person claiming an interest in the surplus from the sale, if any, other than the property owner as of the date of the lis pendens, must file a claim before the clerk reports the surplus as unclaimed.

10/01/2026

Kevin Karnes
CLERK OF THE CIRCUIT COURT
As Clerk of the Court
(SEAL) BY: N Wright-Angad
Deputy Clerk

Padgett Law Group,
Attorney for Plaintiff
6267 Old Water Oak Road, Suite 203
Tallahassee, FL 32312
attorney@padgettlawgroup.com
TDP File No. 24-013006-2
October 9, 16, 2026 26-04263L

SECOND INSERTION

NOTICE OF FORECLOSURE SALE
IN AND FOR CIRCUIT COURT OF THE TWENTIETH JUDICIAL CIRCUIT IN AND FOR LEE COUNTY, FLORIDA
CIVIL DIVISION
CASE NO.: 26-CA-000644
U.S. BANK TRUST COMPANY, NATIONAL ASSOCIATION, AS TRUSTEE FOR VELOCITY COMMERCIAL CAPITAL LOAN TRUST 2025-2,
Plaintiff, vs.
BRANDY KARALEWITZ, individually; UNKNOWN SPOUSE OF BRANDY KARALEWITZ; SHANE KARALEWITZ, individually; UNKNOWN SPOUSE OF SHANE KARALEWITZ; and UNKNOWN TENANT(S)/ OWNER(S)/SPOUSE(S) IN POSSESSION,
Defendants.

NOTICE IS GIVEN that pursuant to the Final Judgment of Foreclosure entered on October 1, 2026, in Civil Action No. 26-CA-000644, of the Circuit Court of the Twentieth Judicial Circuit in and for Lee County, Florida, in which, U.S. BANK TRUST COMPANY, NATIONAL ASSOCIATION, AS TRUSTEE FOR VELOCITY COMMERCIAL CAPITAL LOAN TRUST 2025-2, is the Plaintiff, the Clerk of this Court will sell to the highest and best bidder for cash at https://lee.realforeclose.com at 9:00 am on the 5th day of November, 2026 for the real property located at:

Legal Description:
Lots 17, 18 and 19, Block 517, Cape Coral Unit 13, according to the map or plat thereof as recorded in Plat Book 13, Page 56, Public Records of Lee County, Florida.
Address: 1412 Southeast 33rd Terrace, Cape Coral, Florida 33904-4277
Strap No.: 06-45-24-C2-00517.0170

ANY PERSON CLAIMING AN INTEREST IN THE SURPLUS FROM THE SALE, IF ANY, OTHER THAN THE PROPERTY OWNER AS OF THE DATE OF THE LIS PENDENS MUST FILE A CLAIM IN ACCORDANCE WITH FLORIDA STATUES, SECTION 45.031.

Dated this 2nd day of October 2026.
10/02/2026

Kevin C. Karnes
Clerk of Courts
(SEAL) N Wright-Angad
Deputy Clerk

/s/ Paul A. Giordano
PAUL A. GIORDANO
Florida Bar No. (194190)
pgiordano@ralaw.com
serve.pgiordano@ralaw.com
Roetzel & Andress,
1617 Hendry Street, Suite 400
Fort Myers, FL 33901-2904
Telephone: 239.337.3850
Attorneys for Plaintiff
#25532594_v1 137924.0176
October 9, 16, 2026 26-04283L

SECOND INSERTION

NOTICE OF FORECLOSURE SALE
IN THE CIRCUIT COURT OF THE TWENTIETH JUDICIAL CIRCUIT IN AND FOR LEE COUNTY, FLORIDA
Case No: 25-CA-004735
CARRINGTON MORTGAGE SERVICES, LLC,
Plaintiff, vs.
TEMILIENNE METELUS CEANT, ET AL.,
Defendants.

NOTICE IS HEREBY GIVEN that pursuant the Final Judgment of Foreclosure dated September 22, 2026 and entered in Case No. 25-CA-004735 of the Circuit Court of the Judicial Circuit in and for Lee County, Florida wherein CARRINGTON MORTGAGE SERVICES, LLC, is the Plaintiff and TEMILIENNE METELUS CEANT; SUNNOVA TE MANAGEMENT LLC, are Defendants, I, Kevin C. Karnes, Lee County Clerk of Courts, will sell to the highest and best bidder for cash at www.lee.realforeclose.com at 9:00 a.m. on January 7, 2027 the following described property set forth in said Final Judgment, to wit:

LOT 20, BLOCK 4, LEHIGH ACRES UNIT 1, SECTION 22, TOWNSHIP 45 SOUTH, RANGE 27 EAST, ACCORDING TO THE PLAT THEREOF, AS RECORDED IN PLAT BOOK 18, PAGE 71, OF THE PUBLIC RECORDS OF LEE COUNTY, FLORIDA

Commonly known as: 716 Bering Ave S, Lehigh Acres, FL 33974

Any person claiming an interest in the surplus from the sale, if any, other than the property owner as of the date of the lis pendens must file a claim before the clerk reports the surplus as unclaimed.

If the sale is set aside, the Purchaser may be entitled to only a return of the sale deposit less any applicable fees and costs and shall have no other recourse against the Mortgagor, the Mortgagee or the Mortgagee's attorney.

DATED in Lee, Florida this, day of 10/01/2026,

Kevin C. Karnes
As Clerk of Circuit Court
Lee County, Florida
(SEAL) N Wright-Angad
Deputy Clerk

LLS13753
October 9, 16, 2026 26-04269L

SECOND INSERTION

NOTICE OF FORECLOSURE SALE
IN THE CIRCUIT COURT OF THE TWENTIETH JUDICIAL CIRCUIT, IN AND FOR LEE COUNTY, FLORIDA
CIVIL DIVISION
CASE NO.: 25-CA-005352
FREEDOM MORTGAGE CORPORATION
PLAINTIFF, vs.
AZAEL ALFONSO MANSO, YANET PADRON AGUILERA AND UNKNOWN TENANT IN POSSESSION OF THE SUBJECT PROPERTY,
DEFENDANTS.

NOTICE IS HEREBY GIVEN pursuant to Final Judgment of Foreclosure dated the 30th day of September 2026, and entered in Case No. 25-CA-005352, of the Circuit Court of the Twentieth Judicial Circuit in and for Lee County, Florida, wherein Freedom Mortgage Corporation is the Plaintiff and AZAEL ALFONSO MANSO, AND YANET PADRON AGUILERA are defendants. Kevin C. Karnes as the Clerk of the Circuit Court shall sell to the highest and best bidder for cash at www.lee.realforeclose.com at 9:00 A.M. on the 22nd day of October, 2026, the following described property as set forth in said Final Judgment, to wit:

Lot 16, Block 21, of A REPLAT OF PART OF LEHIGH ACRES, SECTION 25, TOWNSHIP 45 SOUTH, RANGE 27 EAST, according to the map or plat thereof, as recorded in Plat Book 35, Page(s) 57 and 58, of the Public Records of Lee County, Florida.

IF YOU ARE A PERSON CLAIMING A RIGHT TO FUNDS REMAINING AFTER THE SALE, YOU MUST FILE A CLAIM WITH THE CLERK NO LATER THAN THE DATE THAT THE CLERK REPORTS THE FUNDS AS UNCLAIMED. IF YOU FAIL TO FILE A CLAIM, YOU WILL NOT BE ENTITLED TO ANY REMAINING FUNDS. AFTER THE FUNDS ARE REPORTED AS UNCLAIMED, ONLY THE OWNER OF RECORD AS OF THE DATE OF THE LIS PENDENS MAY CLAIM THE SURPLUS.

Dated this day of 10/02/2026

Kevin C. Karnes
Clerk of the Circuit Court
(SEAL) By: N Wright-Angad
Deputy Clerk

SUBMITTED BY:
TROMBERG, MILLER, MORRIS & PARTNERS, PLLC
ATTORNEY FOR PLAINTIFF
600 WEST HILLSBORO BOULEVARD, SUITE 600
DEERFIELD BEACH, FL 33441
DESIGNATED PRIMARY E-MAIL FOR SERVICE PURSUANT TO FLA. R. JUD. ADMIN 2.516
ESERVICE@TMPPLLC.COM
25FL373-0702
October 9, 16, 2026 26-04273L

SECOND INSERTION

NOTICE OF SALE PURSUANT TO CHAPTER 45
IN THE CIRCUIT COURT OF THE TWENTIETH JUDICIAL CIRCUIT IN AND FOR LEE COUNTY, FLORIDA
CIVIL ACTION
CASE NO.: 36-2025-CA-004686
U.S. BANK NATIONAL ASSOCIATION,
Plaintiff, vs.
SHAWN JOSEPH SNOW, et al,
Defendant(s).

NOTICE IS HEREBY GIVEN Pursuant to a Final Judgment of Foreclosure dated September 25, 2026, and entered in Case No. 36-2025-CA-004686 of the Circuit Court of the Twentieth Judicial Circuit in and for Lee County, Florida in which U.S. Bank National Association, is the Plaintiff and Shawn Joseph Snow; United States of America Acting through Secretary of Housing and Urban Development; Housing Finance Authority of Lee County, Florida (Florida) a Public Body Corporate and Politic of the State of Florida; are defendants, the Lee County Clerk of the Circuit Court will sell to the highest and best bidder for cash in/on www.lee.realforeclose.com in accordance with chapter 45 Florida Statutes, Lee County, Florida at 9:00am on the 29 day of October, 2026, the following described property as set forth in said Final Judgment of Foreclosure:

LOTS 46 AND 47, BLOCK 2444, CAPE CORAL UNIT 34, ACCORDING TO THE PLAT THEREOF, RECORDED IN PLAT BOOK 16, PAGE(S) 74-86, OF THE PUBLIC RECORDS OF LEE COUNTY, FLORIDA.

A/K/A 1002 NE 1ST AVE CAPE CORAL FL 33909

Any person claiming an interest in the surplus from the sale, if any, other than the property owner as of the date of the Lis Pendens must file a claim before the Clerk reports the surplus as unclaimed.

Dated in Lee County, Florida this day of 10/01/2026

Kevin C. Karnes
Clerk of the Circuit Court
Lee County, Florida
(SEAL) By: N Wright-Angad
Deputy Clerk

Albertelli Law
Attorney for Plaintiff
P.O. Box 23028
Tampa, FL 33623
(813) 221-4743
(813) 221-9171 facsimile
eService: servealaw@albertellilaw.com
IN - 25-011133
October 9, 16, 2026 26-04264L

SECOND INSERTION

NOTICE OF FORECLOSURE SALE
IN THE CIRCUIT COURT OF THE TWENTIETH JUDICIAL CIRCUIT IN AND FOR LEE COUNTY, FLORIDA
CIVIL DIVISION
CASE NO.: 25-CA-005819
New American Funding, LLC F/K/A Broker Solutions, Inc., D/B/A New American Funding
Plaintiff, v.
Louis Duane Colson Jr.
Defendants.

NOTICE IS HEREBY GIVEN pursuant to a Final Judgment of Foreclosure dated September 30, 2026, and entered in Case No. 25-CA-005819 of the Circuit Court of the Twentieth Judicial Circuit in and for Lee COUNTY, Florida, wherein New American Funding, LLC F/K/A Broker Solutions, Inc., D/B/A New American Funding, is Plaintiff, and Louis Duane Colson Jr. are Defendants, the clerk, Kevin C. Karnes, will sell to the highest and best bidder for cash, beginning at 9:00AM lee.realforeclose.com , in accordance with Chapter 45, Florida Statutes, on the December 3, 2026, the following described property as set forth in said Final Judgment, to wit:

Lots 13 and 14, Block 1226, Unit 19, Cape Coral Subdivision, according to the plat thereof, as recorded in Plat Book 13, Pages 121 through 135, inclusive, in the Public Records of Lee County, Florida
Commonly Known As: 2231 SouthEast 27th Terrace, Cape Coral, FL 33904
Parcel ID: 32-44-24-C2-01226.0130

If you are a person claiming a right to funds remaining after the sale, you must file a claim with the clerk no later than the date that the clerk reports the funds as unclaimed. If you fail to file a claim, you will not be entitled to any remaining funds. After the funds are reported as unclaimed, only the owner of record as of the date of the lis pendens may claim the surplus.

DATE: 10/01/2026.

Kevin C. Karnes
CLERK OF THE CIRCUIT COURT
Lee County, Florida
(SEAL) T Mann
AS DEPUTY CLERK

c/o Orlans Law Group PLLC
Attorneys for Plaintiff
621 S. Federal Highway
Suite 10
Fort Lauderdale, FL 33301
(561) 576-6893
Orlans #25-007695
October 9, 16, 2026 26-04261L

THIRD INSERTION

AMENDED NOTICE OF ACTION
IN THE CIRCUIT COURT OF THE TWENTIETH JUDICIAL CIRCUIT IN AND FOR LEE COUNTY, FLORIDA
CIVIL DIVISION
CASE NO. 26-CA-001886
RAYMOND HARVEY,
Plaintiff, v.
WILLIE WASHINGTON, JR., MELCHIZEDEK WASHINGTON, and NORDIK GONZALEZ BARO,
Defendants. /
NORDIK GONZALEZ BARO,
Cross-Plaintiff, v.
WILLIE WASHINGTON, JR.,
Cross-Defendant. /
NORDIK GONZALEZ BARO,
Third-Party Plaintiff, v.
DANIEL KEITH PERKINS AND KATHLEEN A. GLOVER,
Third-Party Defendants.

TO: THIRD-PARTY DEFENDANT, DANIEL KEITH PERKINS

YOU ARE NOTIFIED that an action has been filed against you for indemnity and breach of warranty regarding the following property located in Lee County, Florida:

Lots 1 and 2, Block 1788, Unit 45, Cape Coral Subdivision, according to the map or plat thereof, as recorded in Plat Book 21, Pages 122 through 134, inclusive, of the Public Records of Lee County, Florida.

You are required to serve a copy of your written defenses, if any, upon Plaintiffs' Attorney, Jacqueline F. Perez, Esquire, whose address is KHL Law, 28100 U.S. Highway 19 North, Suite 104, Clearwater, Florida 33761, on or before November 9, 2026, and file the original with the Clerk of this Court either before service on Plaintiffs' Attorney or immediately thereafter; otherwise a default will be entered against you for the relief demanded in the complaint or petition.

WITNESS, my hand and seal of this Court on this day of 09/29/2026

KEVIN C. KARNES
CLERK OF THE CIRCUIT COURT
(SEAL) By: N Wright-Angad
Deputy Clerk

Jacqueline F. Perez, Esquire,
KHL LAW,
28100 U.S. Hwy. 19 North, Suite 104,
Clearwater, Florida 33761
October 2, 9, 16, 23, 2026
26-04110L

FOURTH INSERTION

NOTICE OF ACTION FOR DISSOLUTION OF MARRIAGE AND FOR OTHER RELATED RELIED AND COMPLAINT TO SET ASIDE FRAUDULENT TRANSFER OF MARITAL ASSETS
IN THE CIRCUIT COURT OF THE TWENTIETH JUDICIAL CIRCUIT, IN AND FOR LEE COUNTY, FLORIDA
Case No.: 24-DR-8395
IN RE: THE MARRIAGE OF:
HEATHER N. FULLER,
Petitioner/Wife,
and
SCOTT M. FULLER,
Respondent/Husband,
and
DANIEL VANGORDON,
Respondent/Third Party.

To: Daniel Vangordon
Last Known Address: 895 N. 275 W.
Angola, Indiana 46703

YOU ARE NOTIFIED that an action to set aside fraudulent transfer of marital assets has been filed against you and that you are required to serve a copy of your written defenses, if any, to it on Christina Holly, Esq., attorney for Petitioner/Wife, Heather N. Fuller, whose address is 2077 First Street, Suite 209, Fort Myers, Florida 33901 on or before 10/26/2026, and file the original with the clerk of this Court at 1700 Monroe Street, Fort Myers, Florida 33901 before service on the Petitioner or immediately thereafter. If you fail to do so, a default may be entered against you for the relief demanded in the petition.

Copies of all court documents in this case, including orders, are available at the Clerk of the Circuit Court's office. You may review these documents upon request.

This action is asking the court to decide how the following real or personal property should be divided: None.

You must keep the Clerk of the Circuit Court's office notified of your current address. (You may file a Designation of Current Mailing and E-Mail Address, Florida Supreme Court Approved Family Law Form 12.915). Future papers in this lawsuit will be mailed or e-mailed to the addresses on record at the clerk's office.

WARNING: Rule 12.285, Florida Family Law Rules of Procedure, requires certain automatic disclosure of documents and information. Failure to comply can result in sanctions, including dismissal or striking of pleadings.

Dated: 09/15/2026

Kevin C. Karnes
CLERK OF THE CIRCUIT COURT
(SEAL) By: B Willey
{Deputy Clerk}

Sept. 25; Oct. 2, 9, 16, 2026
26-03965L

--- ACTIONS / SALES ---

SECOND INSERTION

NOTICE TO CREDITORS
IN THE CIRCUIT COURT FOR LEE COUNTY, FLORIDA
PROBATE DIVISION
File No. 2026-CP-002929
IN RE: ESTATE OF PATRICK FRANCIS COLGAN, JR, PATRICK F. COLGAN
Deceased.

The administration of the estate of PATRICK FRANCIS COLGAN, JR, also known as PATRICK F. COLGAN, deceased, whose date of death was September 9, 2026; File Number 2026-CP-002929, is pending in the Circuit Court for LEE County, Florida, Probate Division, the address of which is Address:2075 Dr. Martin Luther King., Blvd. 2nd Floor, Fort Myers, FL 33901

The names and addresses of the personal representatives and the personal representatives' attorney are set forth below.

All creditors of the decedent and other persons having claims or demands against decedent's estate, on whom a copy of this notice is required to be served, must file their claims with this court ON OR BEFORE THE LATER OF 3 MONTHS AFTER THE TIME OF THE FIRST PUBLICATION OF THIS NOTICE OR 30 DAYS AFTER THE DATE OF SERVICE OF A COPY OF THIS NOTICE ON THEM.

All other creditors of the decedent and other persons having claims or demands against decedent's estate must file their claims with this court WITHIN 3 MONTHS AFTER THE DATE OF THE FIRST PUBLICATION OF THIS NOTICE.

The personal representative has no duty to discover whether any property held at the time of the decedent's death by the decedent or the decedent's surviving spouse is property to which the Florida Uniform Disposition of Community Property Rights at Death Act as described in ss. 732.216-732.228, applies, or may apply, unless a written demand is made by a creditor as specified under s. 732.2211, Florida Statutes. The written demand must be filed with the clerk.

ALL CLAIMS NOT FILED WITHIN THE TIME PERIODS SET FORTH IN FLORIDA STATUTES SECTION 733.702 WILL BE FOREVER BARRED.

NOTWITHSTANDING THE TIME PERIOD SET FORTH ABOVE, ANY CLAIM FILED TWO (2) YEARS OR MORE AFTER THE DECEDENT'S DATE OF DEATH IS BARRED.

The date of first publication of this notice is: October 9, 2026.

Signed on this 4TH day of OCTOBER, 2026.

BROOKE KAMENETZ
Personal Representative
10 Lincoln Ave.
Chatham, NJ 07928
DAVID ZACHARY SMITH, Esq
Attorney for Personal Representative
Florida Bar No. 0968110
SMITH & SMITH GROUP, PLLC
6870 Highland Pines Cir
FORT MYERS, FLORIDA 33966
Telephone: 570-815-5447
Email: losspc@gmail.com
Secondary Email: losspc@aol.com
October 9, 16, 2026 26-04307L

SECOND INSERTION

NOTICE TO CREDITORS
IN THE CIRCUIT COURT OF THE TWENTIETH JUDICIAL CIRCUIT IN AND FOR LEE COUNTY, FLORIDA
PROBATE DIVISION
Case No.: 26-CP-002889
Division: Probate
IN RE: ESTATE OF KEVIN LEE MILLER,
Deceased.

The administration of the estate of Kevin Lee Miller, deceased, whose date of death was 08/11/2026, is pending in the Circuit Court for Lee County, Florida, Probate Division, the address of which is 1700 Monroe St., Fort Myers, FL 33901. The file number of the estate is 26-CP-002889. The name and address of the personal representative and the personal representative's attorney are set forth below.

All creditors of the decedent and other persons having claims or demands against decedent's estate on whom a copy of this notice is required to be served must file their claims with this court ON OR BEFORE THE LATER OF THE DATE THAT IS 3 MONTHS AFTER THE TIME OF THE FIRST PUBLICATION OF THIS NOTICE OR 30 DAYS AFTER THE DATE OF SERVICE OF A COPY OF THIS NOTICE ON THEM.

The personal representative has no duty to discover whether any property held at the time of the decedent's death by the decedent or the decedent's surviving spouse is property to which the Florida Uniform Disposition of Community Property Rights at Death Act as described in sections 732.216-732.228, Florida Statutes, applies, or may apply, unless a written demand is made by a creditor as specified under section 732.2211, Florida Statutes.

All other creditors of the decedent and other persons having claims or demands against decedent's estate must file their claims with this court WITHIN 3 MONTHS AFTER THE DATE OF THE FIRST PUBLICATION OF THIS NOTICE.

ALL CLAIMS NOT FILED WITHIN THE TIME PERIODS SET FORTH IN FLORIDA STATUTES SECTION 733.702 WILL BE FOREVER BARRED.

NOTWITHSTANDING THE TIME PERIODS SET FORTH ABOVE, ANY CLAIM FILED TWO (2) YEARS OR MORE AFTER THE DECEDENT'S DATE OF DEATH IS BARRED.

The date of first publication of this notice is October 9, 2026.

Personal Representative:
/s/ Michelle Miller
Michelle Marie Miller
15290 Briarcrest Circle,
Fort Myers, FL 33912
Attorney for Personal Representative:
/s/ Kelly L. Fayer
Kelly L. Fayer, Esq.
Florida Bar No.: 121126
Kelly L. Fayer, P.A.
12601 World Plaza Lane,
Suite 2
Fort Myers, FL 33907
Telephone: (239) 415-3434
Fax: (239) 433-3434
E-Mail: notice@fayerlaw.net
Secondary E-Mail:
service@lawsprt.com
October 9, 16, 2026 26-04328L

PUBLISH YOUR LEGAL NOTICE

We publish all Public sale, Estate & Court-related notices

- We offer an online payment portal for easy credit card payment
- Service includes us e-filing your affidavit to the Clerk's office on your behalf

Email **legal@businessobserverfl.com**

FLORIDA'S NEWSPAPER FOR THE C-SUITE
Business Observer

LV20878_V10

SECOND INSERTION

AMENDED NOTICE OF SALE TO CHANGE DATE OF SALE

To: All members of the general public including all persons on Exhibit "A", record owners, their heirs, guardians and assigns, of the unit week(s) as showing thereon, all located in and governed by that certain:

Declaration of Condominium for TORTUGA BEACH CLUB, a condominium, recorded in O.R. Book 1566 at pages 2174, et seq. Public Records, Lee County, Florida.

Based upon default in assessment payments and pursuant to the Claims of Lien filed by Tortuga Beach Club, a Florida not-for-profit corporation, recorded at Instrument Numbers 2026000158453 on June 16, 2026, and 2026000162514 recorded on June 18, 2026, in the Public Records of Lee County Florida.

GOEDE, DEBOEST & CROSS, PLLC WILL CONDUCT AN ELECTRONIC SALE OF EACH AND EVERY UNIT WEEK LISTED ON THE ATTACHED EXHIBIT "A" and "B" BEGINNING AT 10:00 A.M. ON OCTOBER 28, 2026, IN ACCORDANCE WITH CHAPTER 45, FLORIDA STATUTES AND THE INSTRUCTIONS AND DEPOSIT REQUIREMENTS AT www.gadclaw.com

Obligors and junior lienholders showing on Exhibit "A" and "B" may cure the default and redeem the timeshare interest by paying the amounts secured by the Association's lien on their unit week(s) as reflected in Exhibit "A" and "B" together with trustee's fees and interest through the date of payment in cash or certified funds to GOEDE, DEBOEST & CROSS, PLLC at any time prior to the insurance of the Certificate of Sale on the above date.

***This Amended Notice of Sale amends the date of sale that was noticed on the Notice of Sale recorded on September 15, 2016, at Instrument No. 2026000239519 in the Public Records of Lee County, FL. There will be NO sale on October 9, 2026. The sale will now take place on October 28, 2026.**

Exhibit "A"
Obligors of Tortuga Beach Club Condominium Association, Inc., annual assessments due in this resort on January 1st of each year

Week/Unit	Owner Name	Co-Owner Name	Address	City	State	Zip	Default Year	Amount Due	Per Diem
42-127	Roberto Alvarez, Jr.	Christina Alvarez	10492 Apollo Manor Cir. #309 (Roberto) 12202 Blue Pacific Dr. (Christina)	Riverview Riverview	FL FL	33578 33579	2026	$2,374.04	$0.82
34-147	Alfred J. Bittenbender	Alice M. Bittenbender	6932 San Jose Loop	New Port Richey	FL	34655	2025; 2026	$4,433.80	$1.62
35-136	Catherine Brooks		15989 Old US 41	Fort Myers	FL	33912	2026	$2,033.30	$0.67
23-126	Andrew K. Butler	Jessica Butler and Alexis Butler	7100 Queen Ann Dr. (Andrew) 4144 Archwood Dr. (Jessica and Alexis)	McKinney Holt	TX MI	75072 48842	2026	$2,366.13	$0.82
47-154	Jose Diaz	Alexandra Diaz	9567 Hickory Lane	Saint John	IN	46373	2023; 2024; 2025; 2026	$6,996.28	$2.46
35-153	Scott A. Engel	Joann M. Pacyna	32 Cone Rd. 562 Stanley St.	East Hampton New Britain	CT CT	06424 06051	2026	$2,374.04	$0.82
49-128	Charles R. Erickson		19200 West 102nd St	Lenexa	KS	66220	2025; 2026	$4,441.76	$1.62
50-128	Charles R. Erickson		19200 West 102nd St	Lenexa	KS	66220	2024; 2025; 2026	$4,647.48	$1.68
37-144	Melani Jarvi		555 Shady Ln	Decatur	MI	49045	2026	$2,325.60	$0.80
38-147	Melani Jarvi		555 Shady Ln	Decatur	MI	49045	2026	$2,374.04	$0.82
22-121	Janis Llerandi		15208 E Pond Woods Dr.	Tampa	FL	33618	2026	$2,366.13	$0.82
36-127	Patricia Lortz	Walter E. Lortz	719 Valrico Hills Ln	Valrico	FL	33594	2026	$2,374.04	$0.82
37-127	Patricia Lortz	Walter E. Lortz	719 Valrico Hills Ln	Valrico	FL	33594	2026	$1,808.91	$0.56
47-151	Mark R. Michalski	Sandra Michalski	11512 W 134th Ct. #B	Cedar Lake	IN	46303	2026	$2,374.04	$0.82
38-112	Rudolph J. Neumeier	Melanie L. Neumeier	176 W Read St #522; and to 4694 Wimbleton Way	Marcellus Kalamazoo	MI MI	49067 49009	2025; 2026	$3,914.85	$1.41
37-128	Rudolph J. Neumeier	Melanie L. Neumeier	176 W Read St #522; and to 4694 Wimbleton Way	Marcellus Kalamazoo	MI MI	49067 49009	2025; 2026	$4,453.13	$1.62
34-149	John Novak		1430 Oak Ave	Lemont	IL	60439	2025; 2026	$4,453.13	$1.62
35-119	Debbie Lee Price		24360 Deepwoods Way	North Olmsted	OH	44070	2025; 2026	$4,453.13	$1.62
37-132	Carmen M. Rivera		700 Bode Rd., #5	Elgin	IL	60120	2025; 2026	$4,453.13	$1.62
28-116	Barbara A. Sapp	Calvin Ray Sapp	4639 E Donato Dr.	Gilbert	AZ	85298	2026	$2,371,80	$0.82
35-146	Peter A. Shepperdson	Angela Shepperdson	Holly Gate, Guildford Rd.	Chertsey, Surrey	UK	KT16 9RU	2024; 2025; 2026	$4,624.12	$1.66
36-146	Peter A. Shepperdson	Angela Shepperdson	Holly Gate, Guildford Rd.	Chertsey, Surrey	UK	KT16 9RU	2024; 2025; 2026	$4,624.12	$1.66
33-139	Mary Maxine Taylor		PO Box 1281	Genoa	NV	89411	2026	$2,261.91	$0.77
39-106	Willholland Williams	Dianna Williams	N 7632 Jupiter Dr	Fond Du Lac	WI	54937	2025; 2026	$2,744.75	$0.95

EXHIBIT B

Roberto Alvarez Jr and Christina Alvarez
Unit Week No. 42 in Condominium Parcel Number 127, of TORTUGA BEACH CLUB, a Condominium, according to the Declaration of Condominium thereof recorded in Official Records Book 1566, at Page 2174, in the Public Records of Lee County, Florida and any amendments thereto, if any.
Alfred J. Bittenbender and Alice M. Bittenbender
Unit Week No. 34 in Condominium Parcel Number 147, of TORTUGA BEACH CLUB, a Condominium, according to the Declaration of Condominium thereof recorded in Official Records Book 1566, at Page 2174, in the Public Records of Lee County, Florida and any amendments thereto, if any.
Catherine Brooks
Unit Week No. 35 in Condominium Parcel Number 136, of TORTUGA BEACH CLUB, a Condominium, according to the Declaration of Condominium thereof recorded in Official Records Book 1566, at Page 2174, in the Public Records of Lee County, Florida and any amendments thereto, if any.
Jessica Butler and Alexis Butler and Andrew K. Butler
Unit Week No. 23 in Condominium Parcel Number 126, of TORTUGA BEACH CLUB, a Condominium, according to the Declaration of Condominium thereof recorded in Official Records Book 1566, at Page 2174, in the Public Records of Lee County, Florida and any amendments thereto, if any.
Jose Diaz and Alexandra Diaz
Unit Week No. 47 in Condominium Parcel Number 154, of TORTUGA BEACH CLUB, a Condominium, according to the Declaration of Condominium thereof recorded in Official Records Book 1566, at Page 2174, in the Public Records of Lee County, Florida and any amendments thereto, if any.
Scott A. Engel and Joann M. Pacyna
Unit Week No. 35 in Condominium Parcel Number 153, of TORTUGA BEACH CLUB, a Condominium, according to the Declaration of Condominium thereof recorded in Official Records Book 1566, at Page 2174, in the Public Records of Lee County, Florida and any amendments thereto, if any.
Charles R. Erickson
Unit Week No. 49 in Condominium Parcel Number 128, of TORTUGA BEACH CLUB, a Condominium, according to the Declaration of Condominium thereof recorded in Official Records Book 1566, at Page 2174, in the Public Records of Lee County, Florida and any amendments thereto, if any.
Charles R. Erickson
Unit Week No. 50 in Condominium Parcel Number 128, of TORTUGA BEACH CLUB, a Condominium, according to the Declaration of Condominium thereof recorded in Official Records Book 1566, at Page 2174, in the Public Records of Lee County, Florida and any amendments thereto, if any.
Melani Jarvi
Unit Week No. 37 in Condominium Parcel Number 144, of TORTUGA BEACH CLUB, a Condominium, according to the Declaration of Condominium thereof recorded in Official Records Book 1566, at Page 2174, in the Public Records of Lee County, Florida and any amendments thereto, if any.
Melani Jarvi
Unit Week No. 38 in Condominium Parcel Number 147, of TORTUGA BEACH CLUB, a Condominium, according to the Declaration of Condominium thereof recorded in Official Records Book 1566, at Page 2174, in the Public Records of Lee County, Florida and any amendments thereto, if any.
Janis Llerandi
Unit Week No. 22 in Condominium Parcel Number 121, of TORTUGA BEACH CLUB, a Condominium, according to the Declaration of Condominium thereof recorded in Official Records Book 1566, at Page 2174, in the Public Records of Lee County, Florida and any amendments thereto, if any.
Patricia Lortz and Walter E. Lortz
Unit Week No. 36 in Condominium Parcel Number 127, of TORTUGA BEACH CLUB, a Condominium, according to the Declaration of Condominium thereof recorded in Official Records Book 1566, at Page 2174, in the Public Records of Lee County, Florida and any amendments thereto, if any.
Patricia Lortz and Walter E. Lortz
Unit Week No. 37 in Condominium Parcel Number 127, of TORTUGA BEACH CLUB, a Condominium, according to the Declaration of Condominium thereof recorded in Official Records Book 1566, at Page 2174, in the Public Records of Lee County, Florida and any amendments thereto, if any.
Mark R. Michalski and Sandra Michalski
Unit Week No. 47 in Condominium Parcel Number 151, of TORTUGA BEACH CLUB, a Condominium, according to the Declaration of Condominium thereof recorded in Official Records Book 1566, at Page 2174, in the Public Records of Lee County, Florida and any amendments thereto, if any.
Rudolph J. Neumeier and Melanie L. Neumeier
Unit Week No. 38 in Condominium Parcel Number 112, of TORTUGA BEACH CLUB, a Condominium, according to the Declaration of Condominium thereof recorded in Official Records Book 1566, at Page 2174, in the Public Records of Lee County, Florida and any amendments thereto, if any.

continued on next page

--- ACTIONS / SALES ---

continued from previous page

Rudolph J. Neumeier and Melanie L. Neumeier
Unit Week No. 37 in Condominium Parcel Number 128, of TORTUGA BEACH CLUB, a Condominium, according to the Declaration of Condominium thereof recorded in Official Records Book 1566, at Page 2174, in the Public Records of Lee County, Florida and any amendments thereto, if any.
John Novak
Unit Week No. 34 in Condominium Parcel Number 149, of TORTUGA BEACH CLUB, a Condominium, according to the Declaration of Condominium thereof recorded in Official Records Book 1566, at Page 2174, in the Public Records of Lee County, Florida and any amendments thereto, if any.
Debbie Lee Price
Unit Week No. 35 in Condominium Parcel Number 119, of TORTUGA BEACH CLUB, a Condominium, according to the Declaration of Condominium thereof recorded in Official Records Book 1566, at Page 2174, in the Public Records of Lee County, Florida and any amendments thereto, if any.
Carmen M. Rivera
Unit Week No. 37 in Condominium Parcel Number 132, of TORTUGA BEACH CLUB, a Condominium, according to the Declaration of Condominium thereof recorded in Official Records Book 1566, at Page 2174, in the Public Records of Lee County, Florida and any amendments thereto, if any.
Barbara A. Sapp and Calvin Ray Sapp
Unit Week No. 28 in Condominium Parcel Number 116, of TORTUGA BEACH CLUB, a Condominium, according to the Declaration of Condominium thereof recorded in Official Records Book 1566, at Page 2174, in the Public Records of Lee County, Florida and any amendments thereto, if any.
Peter A. Shepperdson and Angela Shepperdson
Unit Week No. 35 in Condominium Parcel Number 146, of TORTUGA BEACH CLUB, a Condominium, according to the Declaration of Condominium thereof recorded in Official Records Book 1566, at Page 2174, in the Public Records of Lee County, Florida and any amendments thereto, if any.
Peter A. Shepperdson and Angela Shepperdson
Unit Week No. 36 in Condominium Parcel Number 146, of TORTUGA BEACH CLUB, a Condominium, according to the Declaration of Condominium thereof recorded in Official Records Book 1566, at Page 2174, in the Public Records of Lee County, Florida and any amendments thereto, if any.
Mary Maxine Taylor
Unit Week No. 33 in Condominium Parcel Number 139, of TORTUGA BEACH CLUB, a Condominium, according to the Declaration of Condominium thereof recorded in Official Records Book 1566, at Page 2174, in the Public Records of Lee County, Florida and any amendments thereto, if any.
Willholland Williams
Unit Week No. 39 in Condominium Parcel Number 106, of TORTUGA BEACH CLUB, a Condominium, according to the Declaration of Condominium thereof recorded in Official Records Book 1566, at Page 2174, in the Public Records of Lee County, Florida and any amendments thereto, if any.

Goede, DeBoest & Cross
Kristie Mace, Esq.
2030 McGregor Blvd.
Fort Myers, FL 33966
(P) 239-332-2992
(F) 239-333-2999
Website: www.gadclaw.com
October 9, 16, 2026 26-04239L

SECOND INSERTION

NOTICE OF FORECLOSURE SALE
IN THE CIRCUIT COURT OF THE 20TH JUDICIAL CIRCUIT, IN AND FOR LEE COUNTY, FLORIDA
GENERAL JURISDICTION DIVISION
CASE NO: 26-CA-001505
CARRINGTON MORTGAGE SERVICES, LLC,
Plaintiff, vs.
ULISES J. FUENTES A/K/A ULISES JOSEPH FUENTES; UNKNOWN SPOUSE OF ULISES J. FUENTES A/K/A ULISES JOSEPH FUENTES; BELLA VIDA AT ENTRADA HOMEOWNERS' ASSOCIATION, INC.; UNKNOWN TENANT #1; UNKNOWN TENANT #2,,
Defendants.
NOTICE IS HEREBY GIVEN pursuant to FINAL JUDGMENT OF FORECLOSURE dated September 22, 2026, entered in Civil Case No. 26-CA-001505 of the Circuit Court of the 20TH Judicial Circuit in and for Lee County, Florida, wherein CARRINGTON MORTGAGE SERVICES, LLC is Plaintiff and FUENTES, ULISES J, et al, are Defendants. The Clerk, KEVIN C. KARNES, shall sell to the highest and best bidder for cash at Lee County On Line Public Auction website: https://lee.realforeclose.com, at 09:00 AM on October 22, 2026, in accordance with Chapter 45, Florida Statutes, the following described property located in LEE County, Florida, as set forth in said FINAL JUDGMENT OF FORECLOSURE to-wit:

LOT 13, BLOCK 8010, BELLA VIDA, ACCORDING TO THE PLAT THEREOF, RECORDED IN PLAT INSTRUMENT NUMBER 2005000056034, OF THE PUBLIC RECORDS OF LEE COUNTY, FLORIDA.
PROPERTY ADDRESS: 3597 MALAGROTTA CIR, Cape Coral, FL 33909

If you are a person claiming a right to funds remaining after the sale, you must file a claim with the clerk no later than the date that the clerk reports the funds as unclaimed. If you fail to file a claim, you will not be entitled to any remaining funds. After the funds are reported as unclaimed, only the owner of record as of the date of the lis pendens may claim the surplus.

Dated this 10/05/2026.
Kevin C. Karnes
Clerk of the Circuit Court
(SEAL) By: T Mann
Deputy Clerk
FRENKEL LAMBERT WEISMAN & GORDON, LLP
Attorney for Plaintiff – Bidder # 20326
04-103201-F00
October 9, 16, 2026 26-04316L

SECOND INSERTION

NOTICE OF SALE
IN THE COUNTY COURT OF THE TWENTIETH JUDICIAL CIRCUIT IN AND FOR LEE COUNTY, FLORIDA
Case No. 26-CC-005632
SOUTH POINTE VILLAS CONDOMINIUM, PHASE IV, ASSOCIATION, INC.,
a Florida not-for-profit corporation
Plaintiff, vs.
POINTE REAL ESTATE, LLC, A NEW MEXICO COMPANY, AND ALL OTHER OCCUPANTS OF 6300 SOUTH POINTE BLVD. 475, FORT MYERS, FL 33919
Defendants.
Notice is hereby given that, pursuant to the Order or Final Judgment entered in this cause in the County Court of Lee County, Florida, I will sell the property situated in Lee County, Florida, described as:

Unit 75-D, SOUTH POINTE VILLAS CONDOMINIUM, PHASE IV, according to T.1-1E Declaration of Condominium Recorded in Official Records Book 1424 at Page(s) 1408 through 1456, inclusive, and as per plat thereof recorded in Condominium Plat Book 5, Page(s) 283 through 291, and amended by amendment to Condominium Declaration of SOUTH POINTE VILLAS CONSOMINIUM, PHASE IV, Recorded in Official Records Book 1440, Page(s) 1463 and 1464, and any amendments thereof, Public Records of Lee County, Florida, together with an undivided interest in the common elements appurtenant thereto.
Parcel ID #: 21-45-24-31-00075.00D0
Property Address: 6300 South Pointe Blvd. 475, Fort Myers, FL 33919

At public sale, to the highest and best bidder, for cash, www.lee.realforeclose.com, at 9:00 a.m. on November 5, 2026, in accordance with Chapter 45, Florida Statutes.

Any person claiming an interest in the surplus from the sale, if any, other than the property owner as of the date of the Lis Pendens must file a claim in accordance with Florida Statutes, Section 45.031.

Dated: 10/05/2026
Kevin C. Karnes
As Clerk of the Court
(SEAL) By: T Mann
Deputy Clerk
Diane M. Simons, Esq.,
1705 Colonial Blvd.,
Suite C3,
Fort Myers, FL 33907
October 9, 16, 2026 26-04323L

SECOND INSERTION

NOTICE OF SALE OF REAL PROPERTY
IN THE CIRCUIT COURT OF THE TWENTIETH JUDICIAL CIRCUIT IN AND FOR LEE COUNTY, FLORIDA
CIVIL ACTION
CASE NO: 25-CA-003482
DONALD H. KING and CYNTHIA R. KING, as Trustees of The KING FAMILY REVOCABLE TRUST dated April 5, 2012, and NUVIEW TRUST CO. CUSTODIAN FBO DONALD H. KING IRA #1713958,
Plaintiffs, v.
TSAVO GROUP, INC., a Florida Corporation, WALQUINE LEMY, individually, and KETWANA NOKESHIER LEMY, an individual, PEPITO B. ANDRES and EMMA C. ANDRES, individuals, WB WILLIAMSON BROS INC., a Florida corporation,
Defendants.
NOTICE IS HEREBY GIVEN that, pursuant to the Default Final Judgment of Foreclosure entered on October 2, 2026 in the above-styled cause, in which DONALD H. KING and CYNTHIA R. KING, as Trustees of The KING FAMILY REVOCABLE TRUST dated April 5, 2012, and NUVIEW TRUST CO. CUSTODIAN FBO DONALD H. KING IRA #1713958, are the Plaintiffs; TSAVO GROUP, INC., a Florida Corporation, WALQUINE LEMY, individually, and KETWANA NOKESHIER LEMY, an individual, PEPITO B. ANDRES and EMMA C. ANDRES, individuals, WB WILLIAMSON BROS INC., a Florida corporation, are the Defendants. The Clerk of the Circuit Court of Lee County, Florida, will sell at public sale to the highest and best bidder for cash, except as set forth herein, at 9:00 a.m. on November 05, 2026, by electronic sale at www.lee.realforeclose.com in accordance with section 45.031, Florida Statutes, the following described real property situated in Lee County, Florida:

Property 1: 3619 NW 47th Avenue, Cape Coral, FL 33993
LOTS 22 AND 23, BLOCK 5482, CAPE CORAL, UNIT 90, ACCORDING TO THE PLAT THEREOF, RECORDED IN PLAT BOOK 24, PAGES 12 THROUGH 29, INCLUSIVE, OF THE PUBLIC RECORDS OF LEE COUNTY, FLORIDA.
Property 2: 2502 NW 43rd Place, Cape Coral, FL 33993
LOTS 9 AND 10, BLOCK 5168, UNIT 83, CAPE CORAL SUBDIVISION, ACCORDING TO THE PLAT THEREOF, AS RECORDED IN PLAT BOOK 23, PAGE(S) 41 THROUGH 54, INCLUSIVE, OF THE PUBLIC RECORDS OF LEE COUNTY, FLORIDA.
Property 3: 4122 NW 39th Lane and 4111 NW 39th Street, Cape Coral, FL 33993
Parcel 1: Lots 49 and 50, Block 5465, Cape Coral Subdivision, Unit 90, according to the Plat thereof, as recorded in Plat Book 24, Pages 12 through 29, inclusive, of the Public Records of Lee County, Florida.
Parcel 2: Lots 35 and 36, Block 5465, Cape Coral Subdivision, Unit 90, according to the Plat thereof, as recorded in Plat Book 24, Pages 12 through 29, inclusive, of the Public Records of Lee County, Florida.

ANY PERSON CLAIMING AN INTEREST IN THE SURPLUS FROM THE SALE, IF ANY, OTHER THAN THE PROPERTY OWNER AS OF THE DATE OF THE LIS PENDENS MUST FILE A CLAIM IN ACCORDANCE WITH FLORIDA STATUTES, SECTION 45.031.

DATED this day of 10/07/2026.
KEVIN C. KARNES
Clerk of the Circuit Court
Lee County, Florida
(SEAL) By: T Mann
Deputy Clerk
By: /s/ Irina Prell
Irina Prell, esq.
FL Bar: 1040441
Prell-Spearing Law, PA.
3729 Chiquita blvd. S.
Cape Coral, FL 33914
Primary email: irina@spearinglaw.com
Secondary email:
shenelle@spearinglaw.com
Tel: 239-231-2222
October 9, 16, 2026 26-04351L

SECOND INSERTION

NOTICE OF ACTION
IN THE CIRCUIT COURT OF THE TWENTIETH JUDICIAL CIRCUIT IN AND FOR LEE COUNTY, FLORIDA
CASE NO.: 25-CA-006542
ANA CARO,
Plaintiff, v.
DONNA FAVIA, SALVATORE FAVIA, and FLORIDA LANDMARK COMMUNITIES, LLC,
Defendants.
TO: DONNA FAVIA
6819 CEDAR BLUFF WAY
SACRAMENTO, CA 95823
SALVATORE FAVIA
192 RARITAN ST
KEYPORT, NJ 07735
ALICE ALLEN VERNOR
1309 VICTORIA ST
NORTH CHICAGO, IL 60064
LOAL CLARK
607 PARMA DR
LAKE VILLA, IL 60046
SUSAN SIWULA
37160 N IL ROUTE 59
LAKE VILLA, IL 60046
WILLIAM ALLEN
1549 JACKSON ST APT 1
NORTH CHICAGO, IL 60064
FRANK W. SPATARO
6243 S MONITOR ST
CHICAGO, IL 60638
BETTY SPATARO
6243 S MONITOR ST
CHICAGO, IL 60638

YOU ARE NOTIFIED that an action to quiet title on the following property in Lee County, Florida:

THE FOLLOWING DESCRIBED LAND, SITUATE, LYING, AND BEING IN LEE COUNTY, FLORIDA, TO WIT:
LOT 19 PARCEL:
LOT 19, BLOCK 25, UNIT 5, SECTION 3, TOWNSHIP 44 SOUTH, RANGE 26 EAST, LEHIGH ACRES, ACCORDING TO THE PLAT THEREOF, RECORDED IN PLAT BOOK 26, PAGE 7, OF THE PUBLIC RECORDS OF LEE COUNTY, FLORIDA.
PARCEL ID NO.: 03-44-26-05-00025.0190
LOT 15 PARCEL:
LOT 15, BLOCK 110, UNIT 11, SECTION 13, TOWNSHIP 44 SOUTH, RANGE 26 EAST, LEHIGH ACRES, ACCORDING TO THE PLAT THEREOF, RECORDED IN PLAT BOOK 15, PAGE 62, OF THE PUBLIC RECORDS OF LEE COUNTY, FLORIDA.
PARCEL ID NO.: 13-44-26-l3-11110.0150
LOT 4 PARCEL:
LOT 4, BLOCK 126, UNIT 9, SECTION 12, TOWNSHIP 44 SOUTH, RANGE 26 EAST, LEHIGH ACRES, FLORIDA, ACCORDING TO THE MAP OR PLAT THEREOF ON FILE IN THE OFFICE OF THE CLERK OF THE CIRCUIT COURT, RECORDED IN PLAT BOOK 26, PAGE 109, PUBLIC RECORDS, LEE COUNTY, FLORIDA.
PARCEL ID NO.: 12-44-26-09-00126.0040

has been filed against you and that you are required to serve a copy of your written defenses, if any, to it on The Law Office of C.W. Wickersham, Jr., P.A., Plaintiff's attorney, at 2720 Park Street, Suite 205, Jacksonville, Florida, 32205, Phone Number: (904) 389-6202, November 16, 2026 of the first date of publication of this Notice, and file the original with the Clerk of this Court, at 2075 Dr. Martin Luther King Blvd, 1st and 2nd Floor, Fort Myers, Florida 33901 before service on Plaintiff or immediately thereafter. If you fail to do so, a Default may be entered against you for the relief demanded in the Complaint.

DATED this day of 10/05/2026
Kevin C. Karnes
Clerk of the Circuit Court
(SEAL) By: N Wright-Angad
As Deputy Clerk
The Law Office of C.W. Wickersham, Jr., P.A.,
Plaintiff's attorney,
2720 Park Street,
Suite 205,
Jacksonville, Florida, 32205,
Phone Number: (904) 389-6202
October 9, 16, 23, 30, 2026
26-04336L

SECOND INSERTION

NOTICE OF FORECLOSURE SALE
IN THE CIRCUIT COURT OF THE TWENTIETH JUDICIAL CIRCUIT IN AND FOR LEE COUNTY, FLORIDA
CIVIL ACTION
CASE NO.: 26-CA-1478
HUNTERS RIDGE COMMUNITY ASSOCIATION, INC., a Florida Not-For-Profit Corporation,
Plaintiff, v.
JOY A. FRANKLIN, UNKNOWN SPOUSE OF JOY A. FRANKLIN and UNKNOWN TENANT(S)/ OCCUPANT(S),
Defendants.
NOTICE IS HEREBY GIVEN that, pursuant to a Final Judgment of Foreclosure dated September 2, 2026 entered in Case No. 2026-CA-1478 of the Circuit Court of the Twentieth Judicial Circuit in and for Lee County, Florida, I will sell to the highest bidder beginning at 9:00 a.m. on November 5, 2026, at www.lee.realforeclose.com, the following described property as set forth in said Final Judgment, to-wit:

A portion of Tract "K", Hunters Ridge, a subdivision on file and of Record in Plat Book 44, Pages 37 through 43 of the Plat Records of Lee County, Florida, said portion being more particularly described by metes and bounds as follows:
Commencing at the most Northwesterly corner of Tract "E" of said Hunters Ridge; thence along a Westerly line of said Tract "E", being the Easterly right of way line of Sweet Bay Lane, South 00° 10' 18" West, 81.18 feet to the most Northwesterly corner of Tract "K", Hunters Ridge, being also a corner of said Tract "E"; thence along the North line of said Tract "K"; South 85° 52' 24" East, 270.40 feet to a corner of said Tract "K"; thence across said Tract "K" of Hunters Ridge, South 63 ° 51' 22" East, 335.38 feet to a point; thence continuing across said Tract "K,, of Hunters Ridge, South 67° 16' 30" East, 41.33 feet to the "Point of Beginning" of the portion herein described; thence along the Northeasterly line of said portion, South 67° 16' 30" East 40.00 feet to a point; thence along the Southeasterly line of said portion, South 22° 43' 30" West, 67 .50 feet to a point; thence along the Southwesterly line of said portion, North 67° 16' 30" West, 40.00 feet to a point; thence along the Northwesterly line of said portion, North 22° 43' 30" East, 67.50 feet to the "Point of Beginning". Parcel ID #06-48-26-B3-002K0.0320
a/k/a 12753 Maiden Cane Lane, Bonita Springs FL, 34135

ANY PERSON CLAIMING AN INTEREST IN THE SURPLUS PROCEEDS FROM THE SALE, IF ANY, OTHER THAN THE PROPERTY OWNER AS OF THE DATE OF THE LIS PENDENS MUST FILE A CLAIM BEFORE THE CLERK REPORTS THE SURPLUS AMOUNTS AS UNCLAIMED IN ACCORDANCE WITH FLORIDA STATUTES SECTION 45.031.

Dated this 5th day of October, 2026.
KEVIN C. KARNES, Clerk of Court
(SEAL) By: T Mann
Deputy Clerk
Kristie P. Mace, Esq.,
Attorney for Plaintiff,
kmace@gadclaw.com,
nsortino@gadclaw.com and
kgermanis@gadclaw.com
October 9, 16, 2026 26-04302L

SECOND INSERTION

NOTICE OF ACTION - CONSTRUCTIVE SERVICE
IN THE CIRCUIT COURT OF THE 20TH JUDICIAL CIRCUIT, IN AND FOR LEE COUNTY, FLORIDA
GENERAL JURISDICTION DIVISION
CASE NO: 26-CA-004326
PENNYMAC LOAN SERVICES, LLC,
Plaintiff, vs.
PATRICIA LANG PAVELICH; PATRICIA LANG PAVELICH, AS TRUSTEE OF THE PATRICIA LANG PAVELICH AND JOHN A. PAVELICH REVOCABLE TRUST; JOHN A. PAVELICH; JOHN A. PAVELICH, AS TRUSTEE OF THE PATRICIA LANG PAVELICH AND JOHN A. PAVELICH REVOCABLE TRUST; UNKNOWN SPOUSE OF PATRICIA LANG PAVELICH; UNKNOWN SPOUSE OF JOHN A. PAVELICH; UNKNOWN HEIRS, BENEFICIARIES, DEVISEES, ASSIGNEES, LIENORS, CREDITORS, TRUSTEES AND ALL OTHERS WHO MAY CLAIM AN INTEREST IN THE ESTATE OF RUTH M. LANG; UNKNOWN BENEFICIARIES, DEVISEES, ASSIGNEES, LIENORS, CREDITORS, TRUSTEES AND ALL OTHERS WHO MAY CLAIM AN INTEREST IN THE PATRICIA LANG PAVELICH AND JOHN A. PAVELICH REVOCABLE TRUST; DEER LAKE MASTER PROPERTY OWNERS ASSOCIATION, INC.; UNKNOWN TENANT #1; UNKNOWN TENANT #2,
Defendant(s).
TO: UNKNOWN TENANT #1 AND UNKNOWN TENANT #2
LAST KNOWN ADDRESS: 7532 KEY DEER COURT, FORT MYERS, FL 33966
TO: UNKNOWN HEIRS, BENEFICIARIES, DEVISEES, ASSIGNEES, LIENORS, CREDITORS, TRUSTEES AND ALL OTHERS WHO MAY CLAIM AN INTEREST IN THE ESTATE OF RUTH M. LANG
LAST KNOWN ADDRESS: UNKNOWN
TO: UNKNOWN BENEFICIARIES, DEVISEES, ASSIGNEES, LIENORS, CREDITORS, TRUSTEES AND ALL OTHERS WHO MAY CLAIM AN INTEREST IN THE PATRICIA LANG PAVELICH AND JOHN A. PAVELICH REVOCABLE TRUST
LAST KNOWN ADDRESS: 7532 KEY DEER COURT, FORT MYERS, FL 33966

YOU ARE HEREBY NOTIFIED that an action to foreclose a mortgage on the following property:

LOT 14, DEER LAKE, UNIT I, ACCORDING TO THE PLAT THEREOF RECORDED IN PLAT BOOK 58, PAGES 73 THROUGH 75, PUBLIC RECORDS OF LEE COUNTY, FLORIDA.
PROPERTY ADDRESS: 7532 Key Deer Court, Fort Myers, FL 33966

has been filed against you and you are required to serve a copy of your written defenses, if any, on FRENKEL LAMBERT WEISMAN & GORDON, LLP, Plaintiff's attorney, whose address is One East Broward Blvd., Suite 1111, Ft. Lauderdale, FL, 33301 within, 30 days from the date of the first publication of this Notice of Action) and file the original with the Clerk of this Court either before service on Plaintiff's attorney or immediately thereafter; otherwise a default will be entered against you for the relief demanded in the complaint or petition filed.

THIS NOTICE SHALL BE PUBLISHED ONCE A WEEK FOR TWO CONSECUTIVE WEEKS.

If you are a person with a disability who needs any accommodation in order to participate in this proceeding, you are entitled, at no cost to you, to the provision of certain assistance. Please contact Brooke Dean, Operations Division Manager, whose office is located at Lee County Justice Center, 1700 Monroe Street, Fort Myers, Florida 33901, and whose telephone number is (239) 533-1771, at least 7 days before your scheduled court appearance, or immediately upon receiving this notification if the time before the scheduled appearance is less than 7 days; if you are hearing or voice impaired, call 711.

WITNESS my hand and the seal of this Court at Lee County, Florida, this day of 10/05/2026
Kevin C. Karnes
CLERK OF THE CIRCUIT COURT
(SEAL) BY: N Wright-Angad
DEPUTY CLERK
FRENKEL LAMBERT WEISMAN & GORDON, LLP
ATTORNEY FOR PLAINTIFF
ONE EAST BROWARD BLVD.,
Suite 1111
FORT LAUDERDALE, FL 33301
Telephone: (631) 969-3100 |
Fax: (631) 982-4513
DESIGNATED PRIMARY E-MAIL FOR SERVICE PURSUANT TO FLA. R. JUD. ADMIN 2.516
fleservice@flwlaw.com
04-103590-F00
October 9, 16, 2026 26-04322L

--- ACTIONS / SALES ---

SECOND INSERTION

NOTICE OF SALE
IN THE CIRCUIT COURT OF THE TWENTIETH JUDICIAL CIRCUIT IN AND FOR LEE COUNTY FLORIDA
Case No. 26-CA-2256
FUBAR ASSETS, a Florida limited liability company,
Plaintiff, v.
ARTHUR W. HALL and IRENE E. HALL,
Defendants.

NOTICE IS HEREBY GIVEN that pursuant to a Final Judgment of Foreclosure entered on September 29, 2026 in Case No. 26-CA-2256 in the Circuit Court of the Twentieth Judicial Circuit in and for Lee County, Florida wherein Fubar Assets, a Florida limited liability company is the Plaintiff and Arthur W. Hall and Irene E. Hall are the Defendants. The Clerk of the Court will sell to the highest bidder for cash at www.lee.realforeclose.com on November 5, 2026 at 9:00 a.m. the following described real property:

LEHIGH ACRES UNIT 6 BLK 67 PB 15 PG 58 LOT 2
a.k.a. 2617 70th Street W, Le-High Acres, FL 33971

Any person claiming an interest in the surplus from the sale, if any, other than the property owner as of the date of the Lis Pendens must file a claim in accordance with Florida Statutes, Section 45.031.

Dated this 09/30/2026.

KEVIN C. CARNES
Clerk of the Court
(SEAL) N Wright-Angad
By: Deputy Clerk

October 9, 16, 2026 26-04265L

SECOND INSERTION

NOTICE OF FORECLOSURE SALE
IN THE CIRCUIT COURT OF THE TWENTIETH JUDICIAL CIRCUIT OF FLORIDA IN AND FOR LEE COUNTY
GENERAL JURISDICTION DIVISION
CASE NO. 25-CA-006077
WILMINGTON SAVINGS FUND SOCIETY, FSB, NOT IN ITS INDIVIDUAL CAPACITY BUT SOLELY AS TRUSTEE FOR RESIDENTIAL MORTGAGE AGGREGATION TRUST,
Plaintiff, vs.
ARMANDO SOLER RODRIGUEZ A/K/A ARMANDO SOLER, et al.,
Defendant.

NOTICE IS HEREBY GIVEN pursuant to a Summary Final Judgment of Foreclosure entered August 3, 2026 in Civil Case No. 25-CA-006077 of the Circuit Court of the TWENTIETH JUDICIAL CIRCUIT in and for Lee County, Ft. Myers, Florida, wherein WILMINGTON SAVINGS FUND SOCIETY, FSB, NOT IN ITS INDIVIDUAL CAPACITY
BUT SOLELY AS TRUSTEE FOR RESIDENTIAL MORTGAGE AGGREGATION TRUST is Plaintiff and Armando Soler Rodriguez a/k/a Armando Soler, et al., are Defendants, the Clerk of Court, Kevin C. Karnes, will sell to the highest and best bidder for cash at www.lee.realforeclose.com in accordance with Chapter 45, Florida Statutes on the 29th day of October, 2026 at 9:00 AM on the following described property as set forth in said Summary Final Judgment, to-wit:

Lots 15 and 16, Block 4211, Cape Coral Unit 60, according to the map or plat thereof, as recorded in Plat Book 19, Pages 154 through 169 inclusive, of the Public Records of Lee County, Florida.
Address: 1029 NW 35th Place, Cape Coral, FL 33126

Any person claiming an interest in the surplus from the sale, if any, other than the property owner as of the date of the lis pendens, must file a claim before the clerk reports the surplus as unclaimed.

Dated this day of 10/05/2026

Kevin C. Karnes
Deputy Clerk
CLERK OF THE CIRCUIT COURT
As Clerk of the Court
(SEAL) BY: N Wright-Angad

McCalla Raymer Leibert Pierce, LLP
110 SE 6th Street, Suite 2300
Fort Lauderdale, FL 33301
AccountsPayable@mccalla.com
Counsel of Plaintiff
25-13442FL
October 9, 16, 2026 26-04312L

SECOND INSERTION

NOTICE OF FORECLOSURE SALE
IN THE CIRCUIT COURT FOR THE TWENTIETH JUDICIAL CIRCUIT IN AND FOR LEE COUNTY, FLORIDA
CIRCUIT CIVIL DIVISION
CASE NO.: 26-CA-000485
ATHENE ANNUITY & LIFE COMPANY
Plaintiff(s), vs.
ANDREA HERNANDEZ; THE UNKNOWN TENANT IN POSSESSION
Defendant(s).

NOTICE IS HEREBY GIVEN THAT, pursuant to Plaintiff's Final Judgment of Foreclosure entered on September 22, 2026 in the above-captioned action, the Clerk of Court will sell to the highest and best bidder for cash at www.lee.realforeclose.com in accordance with Chapter 45, Florida Statutes on the 5th day of November, 2026 at 09:00 AM on the following described property as set forth in said Final Judgment of Foreclosure or order, to wit:

Lot 3, Block 39, Southwood, North Part Unit 9, Section 7, Township 45 South, Range 27 East, a subdivision of Lehigh Acres, according to the plat thereof as recorded in Plat Book 26, Page 68, Public Records of Lee County, Florida.
Property address: 608 610 Alabama Road South, Lehigh Acres, FL 33974

Any person claiming an interest in the surplus from the sale, if any, other than the property owner as of the date of the lis pendens, must file a claim before the clerk reports the surplus as unclaimed.

In accordance with Rule of General Practice and Judicial administration 2.515, the undersigned represents that the legal authorities identified herein exist and are accurately cited.

10/05/2026

Kevin Karnes
CLERK OF THE CIRCUIT COURT
As Clerk of the Court
(SEAL) BY: T Mann
Deputy Clerk

Padgett Law Group,
Attorney for Plaintiff
6267 Old Water Oak Road, Suite 203
Tallahassee, FL 32312
attorney@padgettlawgroup.com
TDP File No. 25-011186-1
October 9, 16, 2026 26-04319L

SECOND INSERTION

NOTICE OF SALE
IN THE CIRCUIT COURT OF THE TWENTIETH JUDICIAL CIRCUIT IN AND FOR LEE COUNTY, FLORIDA
Case Number: 26-CA-000808
RBI PRIVATE LENDING, LLC, and/or assigns,
Plaintiff, v.
TOTAL FLORIDA, LLC, JOHENNY MARTINEZ SOCORRO, LUIGI RANIERI, JOHN DOE and JANE DOE, as UNKNOWN TENANTS; and any unknown heirs, devisees, grantees, creditors, and other unknown persons, unknown entities, unknown parties or unknown spouses claiming by, through or under any of the above-named Defendants,
Defendants.

NOTICE IS HEREBY GIVEN that pursuant to the Order Final Judgment of Foreclosure entered in the above-entitled cause in the Circuit Court of Lee County, Florida, that Kevin C. Karnes, Clerk of this Court will sell the property situated in Lee County, Florida, with the property address 567 Flamingo Avenue South, Lehigh Acres, Florida 33974 (the "Property"), situate and being in Lee County, Florida as more fully described below:

Lot 6, Block 46, Lehigh Acres Unit 9, Section 14, Township 45 South, Range 27 East, according to the Plat thereof, recorded in Plat Book 15, Page(s) 139, of the Public Records of Lee County.

at public sale, to the highest bidder for cash, in the Lee Courthouse, online at www.Lee.RealForeclose.com at 9:00 AM on Thursday, October 29, 2026.

Any person claiming an interest in the surplus from the sale, if any, other than the property owner as of the date of the lis pendens must file a claim before the clerk reports the surplus as unclaimed.

DATED THIS 10/5/2026

Kevin C. Karnes
As Clerk of the Court
(SEAL) By: N Wright-Angad
As Deputy Clerk

Submitted by:
Rosenberg & Cummings PLLC
802 NE 20TH Ave,
Fort Lauderdale, FL 33304
Telephone: 954-779-1344
October 9, 16, 2026 26-04311L

SECOND INSERTION

NOTICE OF ACTION FOR DISSOLUTION OF MARRIAGE (NO CHILD OR FINANCIAL SUPPORT)
IN THE CIRCUIT COURT OF THE 20TH JUDICIAL CIRCUIT, IN AND FOR LEE COUNTY, FLORIDA
Case No.: 26-DR-005534
Judge: Reichling, Trent
JANET FERNANDEZ CRUZATA
Petitioner,
and
HERMES HERNANDEZ,
Respondent,
TO: HERMES HERNANDEZ
1700 W 12TH ST LEHIGH ACRES, FL 33972 01/2026

YOU ARE NOTIFIED that an action for dissolution of marriage has been filed against you and that you are required to serve a copy of your written defenses, if any, to it on JANET FERNANDEZ CRUZATA, whose address is 1012 MONROE DRIVE LEHIGH ACRES, FL 33936 on or before September 14 2026, and file the original with the clerk of this Court at 1700 MONROE ST FORT MYERS, FL 33901 before service on Petitioner or immediately thereafter. If you fail to do so, a default may be entered against you for the relief demanded in the petition.

Copies of all court documents in this case, including orders, are available at the Clerk of Circuit Court's office. You may review these documents upon request.

You must keep the Clerk of the Circuit Court's office notified of your current address. (You may file Designation of Current Mailing and E-Mail Address, Florida Supreme Court Approved Family Law Form 12.915.) Future papers in this lawsuit will be mailed or e-mailed to the address(es) on record at the clerk's office.

WARNING: Rule 12.285, Florida Family Law Rules of Procedure, requires certain automatic disclosure of documents and information. Failure to comply can result in sanctions, including dismissal or striking of pleadings.

Dated: 8/5/2026

Kevin Karnes
CLERK OF THE CIRCUIT COURT
(SEAL) By: I Cardelle
Deputy Clerk

October 9, 16, 23, 30, 2026
26-04355L

SECOND INSERTION

NOTICE OF FORECLOSURE SALE
IN THE CIRCUIT COURT OF THE TWENTIETH JUDICIAL CIRCUIT OF FLORIDA IN AND FOR LEE COUNTY
GENERAL JURISDICTION DIVISION
CASE NO. 24-CA-006241
NEWREZ LLC D/B/A SHELLPOINT MORTGAGE SERVICING,
Plaintiff, vs.
THOMAS CHARLES SAWYER A/K/A THOMAS CHARLES SAWYER, SR., et al.,
Defendant.

NOTICE IS HEREBY GIVEN pursuant to a Summary Final Judgment of Foreclosure filed July 24, 2025 entered in Civil Case No. 24-CA-006241 of the Circuit Court of the Twentieth Judicial Circuit Judicial Circuit in and for Lee County Ft. Myers, Florida, the Clerk of Court, Clerk of Court of Lee County, will sell to the highest and best bidder for cash at www.lee.realforeclose.com in accordance with Chapter 45 Florida Statutes, at 9:00 AM November, 19, 2026, on the following described property as set forth in said Summary Final Judgment:

Lots 42 and 43, Block 669, Unit 21, Cape Coral Subdivision, according to the map or plat thereof, as recorded in Plat Book 13, Pages 149 through 173, inclusive, of the Public Records of Lake County, Florida.

Any person claiming an interest in the surplus from the sale, if any, other than the property owner as of the date of the lis pendens, must file a claim before the clerk reports the surplus as unclaimed.

Dated this 10/05/2026.

Kevin C. Karnes
CLERK OF THE CIRCUIT COURT
As Clerk of the Court
(SEAL) BY: N Wright-Angad
Deputy Clerk

MCCALLA RAYMER LEIBERT PIERCE, LLP,
ATTORNEY FOR PLAINTIFF
110 SE 6TH STREET
FORT LAUDERDALE, FL 33301
(855) 281-3909
MRSERVICE@MCCALLA.COM
24-10409FL
October 9, 16, 2026 26-04314L

SECOND INSERTION

NOTICE OF SALE
IN THE COUNTY COURT OF THE TWENTIETH JUDICIAL CIRCUIT IN AND FOR LEE COUNTY, FLORIDA
CIVIL ACTION
CASE NO. 19-CC-2016
CALUSA PALMS MASTER ASSOCIATION, INC., a Florida Not-For-Profit Corporation,
Plaintiff, v.
ANNAMARIA FRISELLA WATKINS aka ANNAMARIA FRISELLA aka ANNAMARIE FRISELLA fka ANAMARIE KERSLAGER, et al.,
Defendants.

Notice is hereby given pursuant to a Final Summary Judgment of Foreclosure filed on the 3rd day of September, 2024 and the Order Granting Plaintiff's Motion for Entry of Order Awarding Attorneys' Fees and Scheduling Sale filed on the 1 st day of October, 2026 in Case No. 19-CC-2016, County Court of the Twentieth Judicial Circuit in and for Lee County, Florida, wherein CALUSA PALMS MASTER ASSOCIATION, INC. is the Plaintiff and ANNAMARIA FRISELLA WATKINS aka ANNAMARIA FRISELLA fka ANAMARIE KERSLAGER and the UNKNOWN SPOUSE OF ANNAMARIA FRISELLA WATKINS aka ANNAMARIA FRISELLA fka ANAMARIE KERSLAGER now known as MICHAEL J. WATKINS are the Defendants. That I will sell to the highest and best bidder for cash beginning at 9:00 AM at www.lee.realforeclose.com in accordance with Chapter 45, Florida Statutes, on November 5, 2026 the following described property as set forth in said Final Summary Judgment of Foreclosure and Order Granting Plaintiff's Motion for Entry of Order Awarding Attorneys' Fees and Scheduling Sale, to-wit:

Lot 76, CALUSA PALMS, according to the Plat thereof, recorded in Plat Book 75, Pages 14 through 18, Public Records of Lee County, Florida
a/ka/ 14606 Calusa Palms Drive, Fort Myers, Florida 33919

Any person claiming an interest in the surplus from the sale, if any, other than the property owner as of the date of the Lis Pendens must file a claim in accordance with Florida Statutes, Section 45.031 before the Clerk reports the surplus as unclaimed.

Dated 10/06/2026

Kevin C. Karnes,
Clerk of the Circuit Court
(SEAL) By: N Wright-Angad
Deputy Clerk

Keith H. Hagman, Esq.,
P.O. Box 1507,
Fort Myers, Florida 33902-1507,
keithhagman@paveselaw.com
glendahaskell@paveselaw.com
October 9, 16, 2026 26-04349L

SECOND INSERTION

NOTICE OF SALE
IN THE CIRCUIT COURT OF THE TWENTIETH JUDICIAL CIRCUIT IN AND FOR LEE COUNTY, FLORIDA
CIVIL DIVISION
CASE NO.: 25-CA-006210
LOAN FUNDER LLC, SERIES 65131,
Plaintiff, vs.
USA HOME BUYERS, LLC, a Florida Limited Liability Company; ALISHA MARAJ,
Defendants.

NOTICE IF HEREBY GIVEN that pursuant to a Consent Final Judgment of Foreclosure entered on September 18, 2026 in the Civil Case No. 25-CA-006210 of the Circuit Court of the Twentieth Judicial Circuit in and for Lee County, Florida, wherein the Clerk of the Court, Kevin C. Karnes, will on DECEMBER 17, 2026 at 9:00 a.m. (EST), offer for sale and sell at public outcry to the highest and best bidder for cash at http://www.lee.realforeclose.com/ in accordance with Chapter 45, Florida Statutes for the following described property situated in Lee County, Florida:

Lot 52 and 53, Block 22, of that certain subdivision known as CAPE CORAL UNIT ONE PART TWO according to the map or plate thereof on file and recorded in the Office of the Clerk of the Circuit Court of Lee County, Florida, in Plat Book 11, Pages 29-36.
Property address: 805 Miramar Court, Cape Coral, Florida 33904
Parcel Identification Number: 18-45-24-C4-00022.0520 / Folio Number : 10205353

ANY PERSON CLAIMING AN INTEREST IN THE SURPLUS FROM THE SALE, IF ANY, OTHER THAN THE PROPERTY OWNER AS OF THE DATE OF THE LIS PENDENS MUST FILE A CLAIM BEFORE THE CLERK REPORTS THE SURPLUS AS UNCLAIMED.

Pursuant to Florida Statute 45.031(2), this notice shall be published twice, one a week for two consecutive weeks, with the last publication being at least 5 days prior to sale.

Dated 09/23/2026

Deputy Clerk
CLERK OF THE CIRCUIT COURT
As Clerk of the Court
Kevin C. Karnes
(SEAL) By: T Mann

Prestige Law Firm, PLLC
Attn: Sale Department
12574 Flagler Center Blvd
Jacksonville, FL 32258
Phone: (850) 312-1323
Fax: (850) 213-6504
tiffani@prestigelawfl.com
October 9, 16, 2026 26-04338L

SECOND INSERTION

NOTICE OF FORECLOSURE SALE PURSUANT TO CHAPTER 45
IN THE CIRCUIT COURT OF THE TWENTIETH JUDICIAL CIRCUIT OF FLORIDA IN AND FOR LEE COUNTY
GENERAL JURISDICTION DIVISION
CASE NO. 25-CA-006509
PENNYMAC LOAN SERVICES, LLC,
Plaintiff, vs.
ANY AND ALL UNKNOWN PARTIES CLAIMING BY, THROUGH, UNDER, AND AGAINST ESTATE OF CHRISTOPHER D MAYS A/K/A CHRISTOPHER DAVID MAYS A/K/A CHRISTOPHER MAYS, WHETHER SAID UNKNOWN PARTIES MAY CLAIM AN INTEREST AS SPOUSES, HEIRS, DEVISEES, GRANTEES, OR OTHER CLAIMANTS, et al.,
Defendant.

NOTICE IS HEREBY GIVEN pursuant to a Summary Final Judgment of Foreclosure entered August 31, 2026 in Civil Case No. 25-CA-006509 of the Circuit Court of the TWENTIETH JUDICIAL CIRCUIT in and for Lee County, Ft. Myers, Florida, wherein PENNYMAC LOAN SERVICES, LLC is Plaintiff and Any and all unknown parties claiming by, through, under, and against estate of Christopher D Mays a/k/a Christopher David Mays a/k/a Christopher Mays, whether said unknown parties may claim an interest as spouses, heirs, devisees, grantees, or other claimants, et al., are Defendants, the Clerk of Court, Kevin C. Karnes, will sell to the highest and best bidder for cash at www.lee.realforeclose.com in accordance with Chapter 45, Florida Statutes on the 29th day of October, 2026 at 9:00 AM on the following described property as set forth in said Summary Final Judgment, to-wit:

Lot No. 20 of PORTICO PHASE I, according to the Plat thereof, as recorded in Instrument No. 2006000411756, of the Public Records of Lee County, Florida.
Address: 14106 Mindello Dr, Fort Myers, FL 33905

Any person claiming an interest in the surplus from the sale, if any, other than the property owner as of the date of the lis pendens, must file a claim before the clerk reports the surplus as unclaimed.

Dated this day of 10/05/2026

Kevin C. Karnes
Deputy Clerk
CLERK OF THE CIRCUIT COURT
As Clerk of the Court
(SEAL) BY: N Wright-Angad

McCalla Raymer Leibert Pierce, LLP
110 SE 6th Street, Suite 2300
Fort Lauderdale, FL 33301
AccountsPayable@mccalla.com
Counsel of Plaintiff
25-14503FL
October 9, 16, 2026 26-04313L

SECOND INSERTION

NOTICE OF FORECLOSURE SALE PURSUANT TO CHAPTER 45
IN THE CIRCUIT COURT OF THE TWENTIETH JUDICIAL CIRCUIT IN AND FOR LEE COUNTY, FLORIDA
25-CA-005370
WILMINGTON SAVINGS FUND SOCIETY, FSB, NOT IN ITS INDIVIDUAL CAPACITY BUT SOLELY AS TRUSTEE OF ANGEL OAK MORTGAGE TRUST 2022-6, MORTGAGE-BACKED CERTIFICATES, SERIES 2022-6,
Plaintiff, VS.
JONATHAN KANE; JENNIFER KANE; UNKNOWN TENANT #1; UNKNOWN TENANT #2;
Defendant(s).

NOTICE IS HEREBY GIVEN that sale will be made pursuant to an Order or Final Judgment. Final Judgment was awarded on September 30, 2026 in Civil Case No. 25-CA-005370, of the Circuit Court of the TWENTIETH Judicial Circuit in and for Lee County, Florida, wherein, WILMINGTON SAVINGS FUND SOCIETY, FSB, NOT IN ITS INDIVIDUAL CAPACITY BUT SOLELY AS TRUSTEE OF ANGEL OAK MORTGAGE TRUST 2022-6, MORTGAGE-BACKED CERTIFICATES, SERIES 2022-6 is the Plaintiff, and JONATHAN KANE and JENNIFER KANE are Defendants.

The Clerk of the Court, Kevin C. Karnes will sell to the highest bidder for cash at www.lee.realforeclose.com on November 19, 2026 at 9:00 a.m. EST the following described real property as set forth in said Final Judgment, to wit:

LOTS 25, 26 AND 27, BLOCK 4688, UNIT 70, CAPE CORAL SUBDIVISION, ACCORDING TO THE PLAT THEREOF, AS RECORDED IN PLAT BOOK 22, PAGE(S) 58 THROUGH 87, INCLUSIVE, OF THE PUBLIC RECORDS OF LEE COUNTY, FLORIDA.

Any person claiming an interest in the surplus from the sale, if any, other than the property owner as of the date of the lis pendens must file a claim before the clerk reports the surplus as unclaimed.

WITNESS my hand and the seal of the court on 10/05/2026.

CLERK OF THE COURT
Kevin C. Karnes
(SEAL) T Mann
Deputy Clerk

ALDRIDGE PITE, LLP
Attorney for Plaintiff
401 W. Linton Blvd.
Suite 202-B
Delray Beach, FL 33444
Telephone: 561-392-6391
Facsimile: 561-392-6965
Primary E-Mail:
ServiceMail@aldridgepite.com
1012-4155B
Ref# 26882
October 9, 16, 2026 26-04317L

SECOND INSERTION

NOTICE OF FORECLOSURE SALE
IN THE CIRCUIT COURT OF THE 20TH JUDICIAL CIRCUIT, IN AND FOR LEE COUNTY, FLORIDA
GENERAL JURISDICTION DIVISION
CASE NO: 25-CA-007031
PENNYMAC LOAN SERVICES, LLC,
Plaintiff, vs.
JOSHUA DAVID WILLIAMS A/K/A JOSHUA WILLIAMS; COURTNEY DEUNDRA WILLIAMS, JR. A/K/A COURTNEY WILLIAMS; US DEPARTMENT OF HOUSING AND URBAN DEVELOPMENT; FORD MOTOR CREDIT COMPANY LLC; JPMORGAN CHASE BANK, N.A.; UNKNOWN TENANT #1; UNKNOWN TENANT #2,,
Defendants.

NOTICE IS HEREBY GIVEN pursuant to FINAL JUDGMENT OF FORECLSOURE dated September 30, 2026 entered in Civil Case No. 25-CA-007031 of the Circuit Court of the 20TH Judicial Circuit in and for Lee County, Florida, wherein PENNYMAC LOAN SERVICES, LLC is Plaintiff and WILLIAMS, JOSHUA DAVID, et al, are Defendants. The Clerk, KEVIN C. KARNES, shall sell to the highest and best bidder for cash at Lee County On Line Public Auction website: https://lee.realforeclose.com, at 09:00 AM on October 29, 2026, in accordance with Chapter 45, Florida Statutes, the following described property located in LEE County, Florida, as set forth in said FINAL JUDGMENT OF FORECLSOURE to-wit:

LOT 35 AND 36, BLOCK 5575, CAPE CORAL SUBDIVISION, UNIT 84, ACCORDING TO THE PLAT THEREOF AS RECORDED IN PLAT BOOK 24, PAGES 30 THROUGH 48, INCLUSIVE, OF THE PUBLIC RECORDS OF LEE COUNTY, FLORIDA.
PROPERTY ADDRESS: 1124 N.E. 36th Street, Cape Coral, FL 33909

If you are a person claiming a right to funds remaining after the sale, you must file a claim with the clerk no later than the date that the clerk reports the funds as unclaimed. If you fail to file a claim, you will not be entitled to any remaining funds. After the funds are reported as unclaimed, only the owner of record as of the date of the lis pendens may claim the surplus.

Dated this day of 10/06/2026,

Kevin C. Karnes,
Clerk of the Circuit Court
(SEAL) By: N Wright-Angad
Deputy Clerk

FRENKEL LAMBERT WEISMAN & GORDON, LLP
Attorney for Plaintiff – Bidder # 20326
04-102956-F00
October 9, 16, 2026 26-04350L

SECOND INSERTION

NOTICE OF FORECLOSURE SALE PURSUANT TO CHAPTER 45
IN THE CIRCUIT COURT OF THE TWENTIETH JUDICIAL CIRCUIT IN AND FOR LEE COUNTY, FLORIDA
26-CA-002568
LAKEVIEW LOAN SERVICING, LLC ,
Plaintiff, VS.
JUAN ALBERTO PADILLA PADRON; UNKNOWN SPOUSE OF JUAN ALBERTO PADILLA PADRON; UNITED STATES OF AMERICA-DEPARTMENT OF HOUSING AND URBAN DEVELOPMENT; UNKNOWN TENANT #1; UNKNOWN TENANT #2,
Defendant(s).

NOTICE IS HEREBY GIVEN that sale will be made pursuant to an Order or Final Judgment. Final Judgment was awarded on September 22, 2026 in Civil Case No. 26-CA-002568, of the Circuit Court of the TWENTIETH Judicial Circuit in and for Lee County, Florida, wherein, LAKEVIEW LOAN SERVICING, LLC is the Plaintiff, and JUAN ALBERTO PADILLA PADRON; UNKNOWN SPOUSE OF JUAN ALBERTO PADILLA PADRON; UNITED STATES OF AMERICA-DEPARTMENT OF HOUSING AND URBAN DEVELOPMENT; UNKNOWN TENANT #1 N/K/A JAVIER DIAZ are Defendants.

The Clerk of the Court, Kevin C. Karnes will sell to the highest bidder for cash at www.lee.realforeclose.com on November 5, 2026 at 09:00:00 AM EST the following described real property as set forth in said Final Judgment, to wit:

LOT 16, BLOCK 55, UNIT 13 TWIN LAKE ESTATES, SECTION 3, TOWNSHIP 45 SOUTH, RANGE 27 EAST, LEHIGH ACRES, ACCORDING TO THE PLAT THEREOF, AS RECORDED IN PLAT BOOK 15, PAGE 219, OF THE PUBLIC RECORDS OF LEE COUNTY, FLORIDA.

Any person claiming an interest in the surplus from the sale, if any, other than the property owner as of the date of the lis pendens must file a claim before the clerk reports the surplus as unclaimed.

WITNESS my hand and the seal of the court on 09/30/2026,

CLERK OF THE COURT
Kevin C. Karnes
(SEAL) N Wright-Angad
Deputy Clerk

ALDRIDGE PITE, LLP
Attorney for Plaintiff
401 W. Linton Blvd., Suite 202-B
Delray Beach, FL 33444
Telephone: 561-392-6391
Facsimile: 561-392-6965
Primary E-Mail:
ServiceMail@aldridgepite.com
1190-366B
Ref# 26471
October 9, 16, 2026 26-04337L

--- ACTIONS / SALES ---

SECOND INSERTION

NOTICE OF SALE
IN THE COUNTY COURT OF THE TWENTIETH JUDICIAL CIRCUIT IN AND FOR LEE COUNTY, FLORIDA
Case No. 26-CC-005642
CALOOSA PRESERVE HOMEOWNERS' ASSOCIATION, INC., a Florida not-for-profit corporation
Plaintiff, vs.
GIACOMO HOLDINGS, AND ALL OTHER OCCUPANTS OF 22710 YELLOW BUTTON LANE, ALVA, FL 33920
Defendants.

Notice is hereby given that, pursuant to the Order or Final Judgment entered in this cause in the County Court of Lee County, Florida, I will sell the property situated in Lee County, Florida, described as:

LOT 31, CALOOSA PRESERVE, ACCORDING TO THE PLAT THEREOF, RECORDED IN PLAT BOOK 77, PAGE 63, OF THE PUBLIC RECORDS OF LEE COUNTY, FLORIDA. ALSO KNOW AS 22710 YELLOW BUTTON L, AL VA, FLORIDA 33920
Parcel ID #: 26-43-27-03-00000.0310
Property Address: 22710 Yellow Button Lane, Alva, FL 33920

At public sale, to the highest and best bidder, for cash, www.lee.realforeclose.com, at 9:00 a.m. on November 5, 2026, in accordance with Chapter 45, Florida Statutes.

Any person claiming an interest in the surplus from the sale, if any, other than the property owner as of the date of the Lis Pendens must file a claim in accordance with Florida Statutes, Section 45.031.

Dated: 10/05/2026

Kevin C. Karnes
As Clerk of the Court
(SEAL) By: T Mann
Deputy Clerk

Diane M. Simons, Esq.,
1705 Colonial Blvd.,
Suite C3,
Fort Myers, FL 33907
October 9, 16, 2026 26-04321L

SECOND INSERTION

NOTICE OF SALE PURSUANT TO CHAPTER 45
IN THE CIRCUIT COURT OF THE 20TH JUDICIAL CIRCUIT, IN AND FOR LEE COUNTY, FLORIDA
CASE NO.: 26-CA-002061
PACIFIC LIFE INSURANCE COMPANY,
Plaintiff, v.
3-6 T INVESTMENTS LLC, et al,
Defendant(s).

NOTICE IS HEREBY GIVEN that pursuant to a Final Judgment in Foreclosure entered on September 29, 2026 and entered in Case No. 26-CA-002061 in the Circuit Court of the 20th Judicial Circuit in and for Lee County, Florida, wherein JUAN EMILIO FLORES, YOANNY LORIE ALLEN, 3-6 T INVESTMENTS LLC, are the Defendants. The Clerk of the Court, KEVIN KARNES, will sell to the highest bidder for cash at www.lee.realforeclose.com on November 19, 2026 at 9:00am, the following described real property as set forth in said Final Judgment, to wit:

LOT 11, BLOCK 12, UNIT 3, SECTION 36, TOWNSHIP 44 SOUTH, RANGE 26 EAST, LEHIGH ACRES, ACCORDING TO PLAT THEREOF, AS RECORDED IN DEED BOOK 281, PAGE 50 AND PLAT BOOK 15 PAGE 92, OF THR PUBLIC RECORDS OF LEE COUNTY, FLORIDA.
and commonly known as: 3004 4TH ST SW, LEHIGH ACRES, FL 33976 (the "Property").

Any person claiming an interest in the surplus from the sale, if any, other than the property owner as of the date of the Lis Pendens must file a claim in accordance with Florida Statutes, Section 45.031.

WITNESS my hand and the seal of the court on 10/05/2026.

Kevin C. Karnes
As Clerk of the Circuit Court
Lee County, Florida
(SEAL) N Wright-Angad
DEPUTY CLERK

GHIDOTTI | BERGER LLP
Attorneys for Plaintiff
10800 Biscayne Blvd., Suite 201
Miami, FL 33161
Telephone: (305) 501-2808
Facsimile: (954) 780-5578
By: /s/ Rebecca E. Smith
Jason Duggar, Esq.
FL Bar No.: 83813
Christophal Hellewell, Esq.
FL Bar No.: 114230
Anya E. Macias, Esq.
FL Bar No.: 0458600
Tara Rosenfeld, Esq.
FL Bar No.: 59454
Johanni Fernandez-Marmol, Esq.
FL Bar No.: 1055042
Jimmy Edwards, Esq.
FL Bar No.: 81855
Rebecca E. Smith, Esq.
FL Bar No.: 1069865
Spencer Gollahon, Esq.
FL Bar No.: 647799
Paris Roach, Esq.
FL Bar No.: 1028751
fcpleadings@ghidottiberger.com
October 9, 16, 2026 26-04301L

SECOND INSERTION

NOTICE OF FORECLOSURE SALE
IN THE CIRCUIT COURT FOR THE TWENTIETH JUDICIAL CIRCUIT IN AND FOR LEE COUNTY, FLORIDA
CIRCUIT CIVIL DIVISION
CASE NO.: 26-CA-000518
PREMIER MORTGAGE RESOURCES, L.L.C
Plaintiff(s), vs.
LAURIE REICH; STEVEN M REICH;
Defendant(s).

NOTICE IS HEREBY GIVEN THAT, pursuant to Plaintiff's Final Judgment of Foreclosure entered on September 30, 2026 in the above-captioned action, the Clerk of Court will sell to the highest and best bidder for cash at www.lee.realforeclose.com in accordance with Chapter 45, Florida Statutes on the 29th day of October, 2026 at 09:00 AM on the following described property as set forth in said Final Judgment of Foreclosure or order, to wit:

LOT (S) 23 AND 24, BLOCK 3969, UNIT 55, CAPE CORAL SUBDIVISION, ACCORDING TO THE MAP OR PLAT THEREOF, AS RECORDED IN PLAT BOOK 19, PAGE(S) 92 THROUGH 106, OF THE PUBLIC RECORDS OF LEE COUNTY, FLORIDA.
Property address: 235 Northwest 25th Place, Cape Coral, FL 33993

Any person claiming an interest in the surplus from the sale, if any, other than the property owner as of the date of the lis pendens, must file a claim before the clerk reports the surplus as unclaimed.

09/30/2026

Kevin Karnes
CLERK OF THE CIRCUIT COURT
As Clerk of the Court
(SEAL) BY: N Wright-Angad
Deputy Clerk

Padgett Law Group,
Attorney for Plaintiff
6267 Old Water Oak Road,
Suite 203
Tallahassee, FL 32312
attorney@padgettlawgroup.com
TDP File No. 25-016719-1
October 9, 16, 2026 26-04266L

SECOND INSERTION

NOTICE OF SALE PURSUANT TO CHAPTER 45
IN THE CIRCUIT COURT OF THE 20TH JUDICIAL CIRCUIT, IN AND FOR LEE COUNTY, FLORIDA
CASE NO.: 26-CA-000986
CALCON MUTUAL MORTGAGE LLC DBA ONETRUST HOME LOANS,
Plaintiff, v.
EDWARD RODRIGUEZ, et al,
Defendant(s).

NOTICE IS HEREBY GIVEN that pursuant to a Final Judgment in Foreclosure entered on September 30, 2026 and entered in Case No. 26-CA-000986 in the Circuit Court of the 20th Judicial Circuit in and for Lee County, Florida, wherein FELECIA RODRIGUEZ AND EDWARD RODRIGUEZ, et al., are the Defendants. The Clerk of the Court, KEVIN KARNES, will sell to the highest bidder for cash at www.lee.realforeclose.com on November 5, 2026 at 9:00am, the following described real property as set forth in said Final Judgment, to wit:

LOT 17 AND 18, BLOCK 2320, CAPE CORAL UNIT 36, ACCORDING TO THE PLAT THEREOF, RECORDED IN PLAT BOOK 16, PAGES 112 THROUGH 130, INCLUSIVE, OF THE PUBLIC RECORDS OF LEE COUNTY, FLORIDA.
and commonly known as: 336 NE 30TH TER, CAPE CORAL, FL 33909 (the "Property").

Any person claiming an interest in the surplus from the sale, if any, other than the property owner as of the date of the Lis Pendens must file a claim in accordance with Florida Statutes, Section 45.031.

WITNESS my hand and the seal of the court on 10/05/2026.

As Clerk of the Circuit Court
Lee County, Florida
(SEAL) T Mann
DEPUTY CLERK

GHIDOTTI | BERGER LLP
Attorneys for Plaintiff
10800 Biscayne Blvd., Suite 201
Miami, FL 33161
Telephone: (305) 501-2808
Facsimile: (954) 780-5578
By: /s/ Rebecca E. Smith
Jason Duggar, Esq.
FL Bar No.: 83813
Christophal Hellewell, Esq.
FL Bar No.: 114230
Anya E. Macias, Esq.
FL Bar No.: 0458600
Tara Rosenfeld, Esq.
FL Bar No.: 59454
Johanni Fernandez-Marmol, Esq.
FL Bar No.: 1055042
Jimmy Edwards, Esq.
FL Bar No.: 81855
Rebecca E. Smith, Esq.
FL Bar No.: 1069865
Spencer Gollahon, Esq.
FL Bar No.: 647799
Paris Roach, Esq.
FL Bar No.: 1028751
fcpleadings@ghidottiberger.com
October 9, 16, 2026 26-04297L

SECOND INSERTION

NOTICE OF SALE PURSUANT TO CHAPTER 45
IN THE CIRCUIT COURT OF THE 20TH JUDICIAL CIRCUIT IN AND FOR LEE COUNTY, FLORIDA
CASE NO.: 26-CA-002302
THE HUNTINGTON NATIONAL BANK,
Plaintiff, vs.
JEROD GENE KESSLER; SARAH B. KESSLER,
Defendant(s).

NOTICE OF SALE IS HEREBY GIVEN pursuant to the order of Uniform Final Judgment of Foreclosure dated September 30, 2026, and entered in Case No. 26-CA-002302 of the Circuit Court of the 20TH Judicial Circuit in and for Lee County, Florida, wherein The Huntington National Bank, is Plaintiff and Jerod Gene Kessler; Sarah B. Kessler, are Defendants, the Office of the Clerk of Kevin Karnes, Lee County Clerk of the Court will sell via online auction at www.lee.realforeclose.com at 9:00 a.m. on the 29th day of October, 2026, the following described property as set forth in said Final Judgment, to wit:

LOT 45, BLOCK A, HENDRY CREEK, A SUBDIVISION ACCORDING TO THE PLAT THEREOF RECORDED IN PLAT BOOK 32, PAGE 30, OF THE PUBLIC RECORDS OF LEE COUNTY, FLORIDA.
Property Address: 7232 Heaven Lane, Fort Myers, Florida 33908 and all fixtures and personal property located therein or thereon, which are included as security in Plaintiff's mortgage.

Any person claiming an interest in the surplus funds from the sale, if any, other than the property owner as of the date of the lis pendens must file a claim before the clerk reports the surplus as unclaimed.

Dated: 10/05/2026

Kevin Karnes
As Clerk of said Court
(SEAL) By: T Mann
As Deputy Clerk

McCabe, Weisberg & Conway, LLC
3222 Commerce Place, Suite A
West Palm Beach, Florida, 33407
Telephone: (561) 713-1400
Email: FLpleadings@mwc-law.com
File No: 24-400390
October 9, 16, 2026 26-04296L

SECOND INSERTION

NOTICE OF FORECLOSURE SALE
IN THE CIRCUIT COURT OF THE TWENTIETH JUDICIAL CIRCUIT IN AND FOR LEE COUNTY, FLORIDA
CASE NO.: 26-CA-002324
U.S. BANK TRUST COMPANY, NATIONAL ASSOCIATION, NOT IN ITS INDIVIDUAL CAPACITY BUT SOLELY AS TRUSTEE FOR COLT 2025-5 MORTGAGE LOAN TRUST,
Plaintiff, vs.
BELIEVE IT 305 CORP; UNKNOWN TENANT(S) IN POSSESSION #1 and #2, and ALL OTHER UNKNOWN PARTIES, et.al.,
Defendant(s).

NOTICE IS HEREBY GIVEN pursuant to a Final Summary Judgment of Foreclosure dated September 24, 2026, entered in Civil Case No.: 26-CA-002324 of the Circuit Court of the Twentieth Judicial Circuit in and for Lee County, Florida, wherein U.S. BANK TRUST COMPANY, NATIONAL ASSOCIATION, NOT IN ITS INDIVIDUAL CAPACITY BUT SOLELY AS TRUSTEE FOR COLT 2025-5 MORTGAGE LOAN TRUST, Plaintiff, and BELIEVE IT 305 CORP; UNKNOWN TENANT(S) IN POSSESSION #1 N/K/A LORNAH LUVIN, are Defendants.

I will sell to the highest bidder for cash, at www.lee.realforeclose.com, at 9:00 AM, on the 7th day of January, 2027, the following described real property as set forth in said Judgment, to wit:

LOT 7, BLOCK 6, UNIT 1, SECTION 25, TOWNSHIP 44 SOUTH, RANGE 26 EAST, LEHIGH ACRES, FLORIDA, ACCORDING TO THE PLAT THEREOF, AS RECORDED IN PLAT BOOK 26, AT PAGE 142, OF THE PUBLIC RECORDS OF LEE COUNTY FLORIDA.

If you are a person claiming a right to funds remaining after the sale, you must file a claim with the clerk before the clerk reports the surplus as unclaimed. If you fail to file a timely claim you will not be entitled to any remaining funds. After the funds are reported as unclaimed, only the owner of record as of the date of the Lis Pendens may claim the surplus.

WITNESS my hand and the seal of the court on 10/05/2026.

KEVIN C. KARNES
CLERK OF THE COURT
(SEAL) By: T Mann
Deputy Clerk

Attorney for Plaintiff:
Brian L. Rosaler, Esquire
Popkin & Rosaler, P.A.
1701West Hillsboro Boulevard, Ste 400
Deerfield Beach, FL 33442
Telephone: (954) 360-9030;
Facsimile: (954) 420-5187
26-52664
October 9, 16, 2026 26-04295L

SECOND INSERTION

NOTICE OF ACTION FOR DISSOLUTION OF MARRIAGE (NO CHILD OR FINANCIAL SUPPORT)
IN THE CIRCUIT COURT OF THE TWENTIETH JUDICIAL CIRCUIT, IN AND FOR LEE COUNTY, FLORIDA
CASE NO: 26-DR-006936
IN RE: The Marriage of
Edyta Jakubowski
Petitioner
and
John Stanley Brannigan
Respondent

TO: John Stanley Brannigan
1000 Purusha Place, Apt. 104, Romney, West Virginia 26757

YOU ARE NOTIFIED that an action for dissolution of marriage has been filed against you and that you are required to serve a copy of your written defenses, if any, to it on Edyta Jakubowski whose address is 9822 SW 159th Path, Miami, Florida 33196 on or before 11/16/2026, and file the original with the clerk of this Court at 1700 Monroe Street, Fort Myers, Florida 33901 before service on Petitioner or immediately thereafter. If you fail to do so, a default may be entered against you for the relief demanded in the petition.

The action is asking the court to decide how the following real or personal property should be divided: 1700 Monroe St Fort Myers, FL 33901

Copies of all court documents in this case, including orders, are available at the Clerk of Circuit Court's office. You may review these documents upon request.

You must keep the Clerk of the Circuit Court's office notified of your current address. (You may file Designation of Current Mailing and E-Mail Address, Florida Supreme Court Approved Family Law Form 12.915.) Future papers in this lawsuit will be mailed or e-mailed to the address(es) on record at the clerk's office.

WARNING: Rule 12.285, Florida Family Law Rules of Procedure, requires certain automatic disclosure of documents and information. Failure to comply can result in sanctions, including dismissal or striking of pleadings.

Dated: 10/05/2026

Kevin C. Karnes
CLERK OF THE CIRCUIT COURT
(SEAL) By: S Lazenby
Deputy Clerk

October 9, 16, 23, 30, 2026
26-04348L

SECOND INSERTION

NOTICE OF FORECLOSURE SALE PURSUANT TO CHAPTER 45
IN THE CIRCUIT COURT OF THE TWENTIETH JUDICIAL CIRCUIT IN AND FOR LEE COUNTY, FLORIDA
25-CA-005541
LAND HOME FINANCIAL SERVICES, INC.,
Plaintiff, VS.
KATHRYN A. STEPHAN A/K/A KATHRYN STEPHAN; MICHAEL DEAN STANLEY; CAPITAL ONE BANK (USA), N.A.; GULF LYFE ROOFING & CONSTRUCTION LLC; UNKNOWN TENANT #1; UNKNOWN TENANT #2
Defendant(s).

NOTICE IS HEREBY GIVEN that sale will be made pursuant to an Order or Final Judgment. Final Judgment was awarded on June 16, 2026 in Civil Case No. 25-CA-005541, of the Circuit Court of the TWENTIETH Judicial Circuit in and for Lee County, Florida, wherein, LAND HOME FINANCIAL SERVICES, INC. is the Plaintiff, and KATHRYN A. STEPHAN A/K/A KATHRYN STEPHAN; MICHAEL DEAN STANLEY; CAPITAL ONE BANK (USA), N.A. and GULF LYFE ROOFING & CONSTRUCTION LLC are Defendants.

The Clerk of the Court, Kevin C. Karnes will sell to the highest bidder for cash at www.lee.realforeclose.com on November 5, 2026 at 9:00 a.m. EST the following described real property as set forth in said Final Judgment, to wit:

LOT 3 AND 4, BLOCK 3263, CAPE CORAL UNIT 66, ACCORDING TO PLAT THEREOF AS RECORDED IN PLAT BOOK 22, PAGE 2 THROUGH 26, OF THE PUBLIC RECORDS OF LEE COUNTY, FLORIDA.

Any person claiming an interest in the surplus from the sale, if any, other than the property owner as of the date of the lis pendens must file a claim before the clerk reports the surplus as unclaimed.

WITNESS my hand and the seal of the court on 10/05/2026.

CLERK OF THE COURT
Kevin C. Karnes
(SEAL) T Mann
Deputy Clerk

ALDRIDGE PITE, LLP
Attorney for Plaintiff
401 W. Linton Blvd.
Suite 202-B
Delray Beach, FL 33444
Telephone: 561-392-6391
Facsimile: 561-392-6965
Primary E-Mail:
ServiceMail@aldridgepite.com
1100-1119B
Ref# 26819
October 9, 16, 2026 26-04315L

SECOND INSERTION

NOTICE OF ACTION
IN THE CIRCUIT COURT OF THE TWENTIETH JUDICIAL CIRCUIT OF FLORIDA IN AND FOR LEE COUNTY
GENERAL JURISDICTION DIVISION
CASE NO. 26-CA-003056
LAKEVIEW LOAN SERVICING, LLC,
Plaintiff, vs.
ERICK FERNANDEZ RODRIGUEZ A/K/A ERICK RODRIGUEZ, et al.,
Defendant.

To: ERICK FERNANDEZ RODRIGUEZ A/K/A ERICK RODRIGUEZ
3808 18 ST W, LEHIGH ACRES, FL 33971
LAST KNOWN ADDRESS STATED, CURRENT RESIDENCE UNKNOWN

YOU ARE HEREBY NOTIFIED that an action to foreclose Mortgage covering the following real and personal property described as follows, to-wit:

THE FOLLOWING DESCRIBED PROPERTY LOCATED IN THE COUNTY OF LEE: LOT 23, BLOCK 38, LEHIGH PARK UNIT 2, SECTION 22, TOWNSHIP 44 SOUTH, RANGE 26 EAST, LEHIGH ACRES, ACCORDING TO THE PLAT THEREOF, RECORDED IN PLAT BOOK 15, PAGE 65, OF THE PUBLIC RECORDS OF LEE COUNTY, FLORIDA.

has been filed against you and you are required to file a copy of your written defenses, if any, to it on Jacqueline T. Levine, Esq, McCalla Raymer Leibert Pierce, LLP, 225 East Robinson Street, Suite 155, Orlando, FL 32801 and file the original with the Clerk of the above-styled Court within 30 days from the first publication, otherwise a Judgment may be entered against you for the relief demanded in the Complaint.

WITNESS my hand and seal of said Court on the 1st day of October, 2026.

Kevin C. Karnes
CLERK OF COURT OF LEE COUNTY
As Clerk of the Court
(SEAL) BY: K Harris
Deputy Clerk

MCCALLA RAYMER LEIBERT PIERCE, LLP
225 East Robinson Street,
Suite 155,
Orlando, FL 32801
Phone: (407) 674-1850
Fax: (321) 248-0420
Email: AccountsPayable@mccalla.com
26-22162FL
October 9, 16, 2026 26-04270L

SECOND INSERTION

NOTICE OF SALE
IN THE CIRCUIT CIVIL COURT OF THE TWENTIETH JUDICIAL CIRCUIT OF FLORIDA, IN AND FOR LEE COUNTY
CIVIL DIVISION
Case No. 25-CA-006201
Division L
FIFTH THIRD BANK, NATIONAL ASSOCIATION
Plaintiff, vs.
SAMUEL THEODORE MILLER, JR. A/K/A SAMUEL MILLER, JR., BOBBY FIELDS, TINA CARVER, VANDELLA FITZHUGH, UNKNOWN SPOUSE OF SAMUEL THEODORE MILLER, JR. A/K/A SAMUEL MILLER, JR., UNKNOWN SPOUSE OF BOBBY FIELDS, UNKNOWN SPOUSE OF TINA CARVER, UNKNOWN SPOUSE OF VANDELLA FITZHUGH, AND UNKNOWN TENANTS/OWNERS,
Defendants.

Notice is hereby given, pursuant to Final Judgment of Foreclosure for Plaintiff entered in this cause on August 3, 2026, in the Circuit Court of Lee County, Florida, Kevin C. Karnes, Clerk of the Circuit Court, will sell the property situated in Lee County, Florida described as:

LOT 3, BLOCK 15, UNIT 4 LEHIGH ACRES, SECTION 11, TOWNSHIP 45 SOUTH, RANGE 27 EAST, A SUBDIVISION ACCORDING TO THE PLAT THEREOF RECORDED AT PLAT BOOK 15, PAGE 153, IN THE PUBLIC RECORDS OF LEE COUNTY, FLORIDA.

and commonly known as: 1052 GRANT BOULEVARD, LEHIGH ACRES, FL 33974; including the building, appurtenances, and fixtures located therein, at public sale, to the highest and best bidder, for cash, at: [] www.lee.realforeclose.com on November 19, 2026 at 9:00 AM.

Any persons claiming an interest in the surplus from the sale, if any, other than the property owner as of the date of the lis pendens must file a claim before the clerk reports the surplus as unclaimed.

Dated this day of 10/05/2026

Clerk of the Circuit Court
Kevin C. Karnes
(SEAL) By: N Wright-Angad
Deputy Clerk

David Adamian
(813) 229-0900 x
Kass Shuler, P.A.
1604 N. Marion St.
Tampa, FL 33602
ForeclosureService@kasslaw.com
078950/2531826/CMP
October 9, 16, 2026 26-04299L

SECOND INSERTION

NOTICE OF FORECLOSURE SALE
IN THE CIRCUIT COURT FOR THE TWENTIETH JUDICIAL CIRCUIT IN AND FOR LEE COUNTY, FLORIDA
CIRCUIT CIVIL DIVISION
CASE NO.: 25-CA-004209
CITIBANK, N.A. NOT IN ITS INDIVIDUAL CAPACITY BUT SOLELY AS DELEWATE TRUSTEE OF J.P. MORGAN MORTGAGE TRUST 2023-DSC2
Plaintiff(s), vs.
SUGAR BEACH ESTATES US LP; BD CAPITAL SE LLC; CARMEN E. CAMPAGNERO
Defendant(s).

NOTICE IS HEREBY GIVEN THAT, pursuant to Plaintiff's Final Judgment of Foreclosure entered on August 6, 2026 in the above-captioned action, the Clerk of Court will sell to the highest and best bidder for cash at www.lee.realforeclose.com in accordance with Chapter 45, Florida Statutes on the 5th day of November 2026 at 09:00 AM on the following described property as set forth in said Final Judgment of Foreclosure or order, to wit:

LOT 32 AND THE EAST 1.7 FEET OF LOT 31, BLOCK 6, GULF HEIGHTS SUBDIVISION, ACCORDING TO THE MAP OR PLAT THEREOF, AS RECORDED IN PLAT BOOK 6, PAGE(S) 39, OF THE PUBLIC RECORDS OF LEE COUNTY, FLORIDA.
Property address: 5268 Estero Boulevard, Fort Myers Beach, FL 33931

Any person claiming an interest in the surplus from the sale, if any, other than the property owner as of the date of the lis pendens, must file a claim before the clerk reports the surplus as unclaimed.

In accordance with Rule of General Practice and Judicial administration 2.515, the undersigned represents that the legal authorities identified herein exist and are accurately cited.

10/05/2026

Kevin Karnes
CLERK OF THE CIRCUIT COURT
As Clerk of the Court
(SEAL) BY: T Mann
Deputy Clerk

Padgett Law Group,
Attorney for Plaintiff
6267 Old Water Oak Road,
Suite 203
Tallahassee, FL 32312
attorney@padgettlawgroup.com
TDP File No. 24-013747-5
October 9, 16, 2026 26-04318L

SECOND INSERTION

NOTICE OF FORECLOSURE SALE
IN THE CIRCUIT COURT OF THE TWENTIETH JUDICIAL CIRCUIT IN AND FOR LEE COUNTY, FLORIDA
GENERAL JURISDICTION DIVISION
CASE NO. 25-CA-002059
U.S. BANK TRUST NATIONAL ASSOCIATION NOT IN ITS INDIVIDUAL CAPACITY BUT SOLELY AS OWNER TRUSTEE FOR RCF 2 ACQUISITION TRUST,
Plaintiff, vs.
FUNDVATE WO2, LLC, et al.
Defendant(s).

NOTICE IS HEREBY GIVEN pursuant to a Final Judgment of Foreclosure dated June 30, 2026, and entered in 25-CA-002059 of the Circuit Court of the TWENTIETH Judicial Circuit in and for Lee County, Florida, wherein U.S. BANK TRUST NATIONAL ASSOCIATION NOT IN ITS INDIVIDUAL CAPACITY BUT SOLELY AS OWNER TRUSTEE FOR RCF 2 ACQUISITION TRUST is the Plaintiff and FUNDVATE WO2, LLC; GABRIEL DELGADO are the Defendant(s). Kevin C. Karnes as the Clerk of the Circuit Court will sell to the highest and best bidder for cash at www.lee.realforeclose.com, at 09:00 AM, on November 05, 2026, the following described property as set forth in said Final Judgment, to wit:

LOT 9, BLOCK 5, PLAT OF UNIT 1- GREENBRIAR SECTION 3, TOWNSHIP 44S, RANGE 27E, A SUBDIVISION OF LEHIGH ACRES, ACCORDING TO THE PLAT THEREOF, AS RECORDED IN PLAT BOOK 27, PAGE 4, OF THE PUBLIC RECORDS OF LEE COUNTY, FLORIDA.
Property Address: 126 GREENBRIAR BOULEVARD, LEHIGH ACRES, FL 33972

Any person claiming an interest in the surplus from the sale, if any, other than the property owner as of the date of the lis pendens must file a claim in accordance with Florida Statutes, Section 45.031.

Dated this day of 10/02/2026

Kevin C. Karnes
As Clerk of the Court
(SEAL) By: N Wright-Angad
As Deputy Clerk

Submitted by: Robertson, Anschutz, Schneid, Crane & Partners, PLLC
Attorneys for Plaintiff
6409 Congress Avenue, Suite 100,
Boca Raton, FL 33487
Telephone: 561-241-6901
Fax: 561-997-6909
25-274421 - MaM
October 9, 16, 2026 26-04298L

--- ESTATE / SALES ---

SECOND INSERTION

NOTICE TO CREDITORS
(**summary administration**)
IN THE CIRCUIT COURT FOR
LEE COUNTY, FLORIDA
PROBATE DIVISION
File No. 2025-CP-3764
IN RE: ESTATE OF
JOSEPH DOMENIC DIVINCENZO,
Deceased.

TO ALL PERSONS HAVING CLAIMS OR DEMANDS AGAINST THE ABOVE ESTATE:

You are hereby notified that an Order of Summary Administration has been entered in the estate of JOSEPH DOMENIC DIVINCENZO, deceased, File Number 2025-CP-3764; by the Circuit Court for Lee County, Florida, Probate Division, the address of which is 2075 Dr. Martin Luther King Jr. Blvd., Fort Myers, FL 33901; that the decedent's date of death was September 30, 2025; that the total value of the estate is real property in the approximate amount of $26,000 and that the names and addresses of those to whom it has been assigned by such order are:

Name Address
Creditors:
NONE
Beneficiaries:
ROSEANN DIVINCENZO
Address
29731 Fairway Blvd.
Willowick, OH 44095

ALL INTERESTED PERSONS ARE NOTIFIED THAT:

All creditors of the estate of the decedent and persons having claims or demands against the estate of the decedent other than those for whom provision for full payment was made in the Order of Summary Administration must file their claims with this court WITHIN THE TIME PERIODS SET FORTH IN FLORIDA STATUTES SECTION 733.702. ALL CLAIMS AND DEMANDS NOT SO FILED WILL BE FOREVER BARRED. NOTWITHSTANDING ANY OTHER APPLICABLE TIME PERIOD, ANY CLAIM FILED TWO (2) YEARS OR MORE AFTER THE DECEDENT'S DATE OF DEATH IS BARRED.

The date of first publication of this Notice is October 9, 2026.

Person Giving Notice:
ROSEANN DIVINCENZO
29731 Fairway Blvd.
Willowick, OH 44095
Attorney for Person Giving Notice:
LORI KILPECK
Attorney for Petitioners
Email: lkilpeck@ralaw.com
Secondary Email::
serve.lkilpeck@ralaw.com
Florida Bar No. 0012371
Roetzel & Andress LPA
1375 East Ninth Street, 30th Floor
Cleveland, OH 44114
Telephone: 216.623.0150
October 9, 16, 2026 26-04256L

SECOND INSERTION

NOTICE TO CREDITORS
IN THE CIRCUIT COURT FOR LEE
COUNTY, FLORIDA
PROBATE DIVISION
File No. 26-CP-001313
Division: Div: P(5)
IN RE: ESTATE OF
JEWELDINE L. GRAY
Deceased.

The administration of the estate of JEWELDINE L. GRAY, deceased, whose date of death was February 19, 2026, is pending in the Circuit Court for LEE County, Florida, Probate Division, the address of which is Justice Center, 2nd Floor, 2075 Dr. Martin Luther King Jr. Boulevard, Fort Myers, FL 33901. The names and addresses of the personal representative and the personal representative's attorney are set forth below.

All creditors of the decedent and other persons having claims or demands against decedent's estate on whom a copy of this notice is required to be served must file their claims with this court ON OR BEFORE THE LATER OF 3 MONTHS AFTER THE TIME OF THE FIRST PUBLICATION OF THIS NOTICE OR 30 DAYS AFTER THE DATE OF SERVICE OF A COPY OF THIS NOTICE ON THEM.

All other creditors of the decedent and other persons having claims or demands against decedent's estate must file their claims with this court WITHIN 3 MONTHS AFTER THE DATE OF THE FIRST PUBLICATION OF THIS NOTICE.

The personal representative has no duty to discover whether any property held at the time of the decedent's death by the decedent or the decedent's surviving spouse is property to which the Florida Uniform Disposition of Community Property Rights at Death Act as described in ss. 732.216-732.228, Florida Statutes, applies, or may apply, unless a written demand is made by a creditor as specified under s. 732.2211, Florida Statutes. The written demand must be filed with the clerk.

ALL CLAIMS NOT FILED WITHIN THE TIME PERIODS SET FORTH IN FLORIDA STATUTES SECTION 733.702 WILL BE FOREVER BARRED.

NOTWITHSTANDING THE TIME PERIODS SET FORTH ABOVE, ANY CLAIM FILED TWO (2) YEARS OR MORE AFTER THE DECEDENT'S DATE OF DEATH IS BARRED.

The date of first publication of this notice is October 9, 2026.

Personal Representative:
Vincent C. Davis
29826 Prairie Falcon Drive
Wesley Chapel, Florida 33545
Attorney for Personal Representative:
Beacon Legacy Law™
John J. Mangan, Jr., Esq. /
FL Bar #: 10020
Heather L. Smith, Esq. /
FL Bar #: 610593
For the Firm
901 SW Martin Downs Blvd.,
Ste. 205
Palm City, FL 34990
Telephone: (772) 324-9050
Fax: (772) 919-4291
E-Mail: hsmith@beaconlegacylaw.com
Secondary E-Mail:
paralegals@beaconlegacylaw.com
Attorney for Petitioner/Personal Representative
October 9, 16, 2026 26-04329L

SECOND INSERTION

NOTICE TO CREDITORS
(**Summary Administration**)
IN THE CIRCUIT COURT OF THE
TWENTIETH JUDICIAL CIRCUIT
IN AND FOR LEE COUNTY,
FLORIDA
PROBATE DIVISION
File No. 2026-CP-002971
IN RE: ESTATE OF
SANDRA E. BEIHL,
Deceased.

TO ALL PERSONS HAVING CLAIMS OR DEMANDS AGAINST THE ABOVE ESTATE:

You are hereby notified that an Order of Summary Administration has been entered in the estate of SANDRA E. BEIHL (the "Decedent"), File Number 2026-CP-002971 by the Circuit Court for Lee County, Florida, Probate Division, the address of which is Clerk of Circuit Court, Lee County Courthouse, Probate Division, 2075 Dr. Martin Luther King Blvd., Ft. Myers, FL 33901; that the Decedent's date of death was June 21, 2026; that the total value of the estate is less than Seventy-Five Thousand and 00/100 Dollars ($75,000.00) and that the names and addresses of those to whom it has been assigned by such order are:

Name Address
BRITTANY A. BEIHL
2061 Dellwood Drive
Tallahassee, Florida 32303
SANDRA E. BEIHL REVOCABLE TRUST, dated February 4, 2004, as further restated
Brittany A. Beihl, Co-Trustee
2061 Dellwood Drive
Tallahassee, Florida 32303
Finemark Bank & Trust, Co-Trustee
800 Laurel Oak Drive, Ste. 100
Naples, FL 34108

ALL INTERESTED PERSONS ARE NOTIFIED THAT:

All creditors of the estate of the Decedent and persons having claims or demands against the estate of the Decedent other than those for whom provision for full payment was made in the Order of Summary Administration must file their claims with this court WITHIN THE TIME PERIODS SET FORTH IN FLORIDA STATUTES SECTION 733.702. ALL CLAIMS AND DEMANDS NOT SO FILED WILL BE FOREVER BARRED. NOTWITHSTANDING ANY OTHER APPLICABLE TIME PERIOD, ANY CLAIM FILED TWO (2) YEARS OR MORE AFTER THE DECEDENT'S DATE OF DEATH IS BARRED.

The personal representatives have no duty to discover whether any property held at the time of the Decedent's death by the Decedent or the Decedent's surviving spouse is property to which the Florida Uniform Disposition of Community Property Rights at Death Act as described in sections 732.216-732.288 Florida Statutes, applies, or may apply, unless a written demand is made by a creditor as specified under section 732.2211, Florida Statutes. The written demand must be filed with the clerk.

The date of first publication of this Notice is October 9, 2026.

Persons Giving Notice:
BRITTANY A. BEIHL
2061 Dellwood Drive
Tallahassee, Florida 32303
FINEMARK BANK & TRUST
800 Laurel Oak Drive, Ste. 100
Naples, FL 34108
Attorney for Persons Giving Notice
DEAN, MEAD, EGERTON, BLOODWORTH, CAPOUANO & BOZARTH, P.A.
Jacqueline C. Johnson
Florida Bar No. 86450
4501 Tamiami Trail N.,
Ste. 220
Naples, FL 34103
Primary E-Mail:
jcjohnson@deanmead.com
Secondary E-Mai:
mtravis@deanmead.com
Phone: 239-544-3069
Attorneys for Petitioners
6576803.v1
October 9, 16, 2026 26-04284L

SECOND INSERTION

AMENDED NOTICE OF SALE TO CHANGE DATE OF SALE

To: All members of the general public including all persons on Exhibit "A", record owners, their heirs, guardians and assigns, of the unit week(s) as showing thereon, all located in and governed by that certain:

Declaration of Condominium for SEAWATCH ON-THE-BEACH, a condominium, recorded in O.R. Book 1583 at pages 448, et seq. Public Records, Lee County, Florida.

Based upon default in assessment payments and pursuant to the Claims of Lien filed by Seawatch On-the-Beach, a Florida not-for-profit corporation, recorded at Instrument Numbers 2026000137697 on May 26, 2026, and 20260001428796 recorded on June 1, 2026, in the Public Records of Lee County Florida.

GOEDE, DEBOEST & CROSS, PLLC WILL CONDUCT AN ELECTRONIC SALE OF EACH AND EVERY UNIT WEEK LISTED ON THE ATTACHED EXHIBIT "A" and "B" BEGINNING AT 10:00 A.M. ON OCTOBER 28, 2026, IN ACCORDANCE WITH CHAPTER 45, FLORIDA STATUTES AND THE INSTRUCTIONS AND DEPOSIT REQUIREMENTS AT www.gadclaw.com

Obligors and junior lienholders showing on Exhibit "A" and "B" may cure the default and redeem the timeshare interest by paying the amounts secured by the Association's lien on their unit week(s) as reflected in Exhibit "A" and "B" together with trustee's fees and interest through the date of payment in cash or certified funds to GOEDE, DEBOEST & CROSS, PLLC at any time prior to the insurance of the Certificate of Sale on the above date.

***This Amended Notice of Sale amends the date of sale that was noticed on the Notice of Sale recorded on September 15, 2016, at Instrument No. 2026000239529 in the Public Records of Lee County, FL. There will be NO sale on October 9, 2026. The sale will now take place on October 28, 2026.**

Exhibit "A"
Obligors of Seawatch On-the-Beach Condominium Association, Inc., annual assessments due in this resort on January 1st of each year

Week/Unit	Owner Name	Co-Owner Name	Address	City	State	Zip	Default Year	Amount Due	Per Diem
46/5101	G. Catherine Beal, Trustee of the G. Catherine Beal Trust Agreement dtd August 30, 1996	C. Winfield Beal	6 Spincaster Dr.	Spring	TX	77389	2026	$1,203.04	$.29
9/5103	David M. Blomberg	Sarah Blomberg	114 Windsor Park Dr., #B101	Carol Stream	IL	60188	2026	$1,408.35	$.38
10/5103	David M. Blomberg	Sarah Blomberg	114 Windsor Park Dr., #B101	Carol Stream	IL	60188	2026	$1,408.35	$.38
11/5103	David M. Blomberg	Sarah Blomberg	114 Windsor Park Dr., #B101	Carol Stream	IL	60188	2026	$1,408.35	$.38
35/2105	L. Scott Brown	Rita Steele Brown	3610 Conservation Trl.	The Villages	FL	32163	2025; 2026	$3,787.47	$1.35
15/4102	Thomas E. Brown	Marian A. Brown	2533 West Ave.	Ocean City	NJ	08226	2025; 2026	$2,246.07	$.74
34/4104	Genevieve S. Buteau		1915 SE 35th St.	Cape Coral	FL	33904	2026	$2,086.10	$.70
22/7101	Clarence E. Dunham	Naydean J. Stubbs	824 South Ave.	Syracruse	NY	13207	2025; 2026	$2,242.98	$.74
19/6104	Richard D. Elliss	Cecelia S. Elliss	1486 Prairie High Rd.; and to 7479 Alkire, Unit 101	Castle Rock Littleton	CO CO	80109 80127	2025; 2026	$2,284.11	$.74
32/1106	Marcia Fennen		175 Meadowcreek Ln.	Murphy	NC	28906	2026	$2,005.57	$.66
28/5104	Antonio A. Gonzalez	Maria V. Gonzalez	7370 Monaco St.	Coral Gables	FL	33143	2026	$2,089.53	$.70
28/5105	Antonio A. Gonzalez	Maria V. Gonzalez	7370 Monaco St.	Coral Gables	FL	33143	2026	$2,089.53	$.70
31/6104	Orlando Hernandez		3401 NW 17th Ave #309	Miami	FL	33142	2026	$2,089.53	$.70
34/3103	Rudolph A. Horvath	Marilyn G. Horvath	15010 Shell Point Blvd.	Fort Myers	FL	33908	2025; 2026	$2,242.98	$.74
35/3103	Rudolph A. Horvath	Marilyn G. Horvath	15010 Shell Point Blvd.	Fort Myers	FL	33908	2025; 2026	$2,228.30	$.74
32/5101	Robert W. Hoenecke, Deceased	Doris G. Hoenecke-Deceased, As Trustees of the Hoenecke Family Trust dtd 2/3/2004	722 Cortez Ave.	Lady Lake	FL	32159	2026	$2,097.97	$.70
50/3101	David N. Kaiser	Kelly R. Kaiser	2549 Broadway St.	Toledo	OH	43609	2026	$2,090.31	$.70
33/3105	Jeffrey W. Kane	Gail Johannson Kane; Anita S. Kane	311 Appleton Lane	Lake Villa	IL	60046	2023; 2024; 2025; 2026	$6,343.02	$2.16
36/4101	Linda J. Ladue		2881 Poppy Rd.	Venice	FL	34293	2026	$1,577.19	$.46
35/2106	Louis A. Maciel	Susana M. Maciel	38 Rounsevell Dr.	East Freetown	MA	02717	2026	$2,090.31	$.70
2/4106	Raymond J. Murphy	Irene Murphy	6146 Canyon Trail	Denver	NC	28037	2026	$2,093.75	$.70
20/4101	Enrico Odorico	Barbara Winn Odorico	11651 Shady Pines Dr	Grand Ledge	MI	48837	2026	$1,131.53	$.26
48/5105	Kenneth D. Parkin	Sharon E. Parkin	115 Third Ave	Lakeview, NS	CN	B4C 4C9	2026	$2,093.75	$.70
50/5105	John M. Popadak	Nancy A. Medvid	12 Orchard Ave.	Lincoln Park	NJ	07035	2024; 2025; 2026	$4,035.92	$1.42
42/3105	Raymond W. Robinson	Maria A. Robinson	32910 N Meadow Rd	Grayslake	IL	60030	2026	$1,021.88	$.21
36/6105	Donald R. Smith	Joan E. Smith	1902 N Fair St.	Marion	IL	62959	2026	$2,090.31	$.70
36/4105	Tiffany M. Stoltz		1129 N Starrett Rd.	Metairie	LA	70003	2026	$1,140.37	$.54
48/4102	John Thompson		823 Arlington Ave N	St. Petersburg	FL	33701	2025; 2026	$2,702.19	$.92
35/4102	Harold Vinson	Andrea Vinson	193 Country Rd 57	Eufaula	AL	36027	2025; 2026	$2,247.47	$.74
36/4102	Harold Vinson	Andrea Vinson	193 Country Rd 57	Eufaula	AL	36027	2026	$2,090.31	$.70
1/1102	Stephen W. Zuck	Kathleen A. Zuck	1270 New Midway Rd	Kinston	TN	37763	2026	$2,093.75	$.70

EXHIBIT B

G. Catherine Beal, Trustee of the G. Catherine Beal Trust Agreement dated August 30,1996 and C. Winfield Beal
Unit/Week No. 46, in Condominium Parcel Number 5101, of SEAWATCH ON-THE-BEACH, a Condominium, together with an undivided interest in the common elements appurtenant thereto, according to the Declaration of Condominium thereof recorded in Official Records Book 1583, at Page 448, in the Public Records of Lee County, Florida and any amendments thereto, if any.

David M. Blomberg and Sarah Blomberg
Unit/Week No. 9, in Condominium Parcel Number 5103, of SEAWATCH ON-THE-BEACH, a Condominium, together with an undivided interest in the common elements appurtenant thereto, according to the Declaration of Condominium thereof recorded in Official Records Book 1583, at Page 448, in the Public Records of Lee County, Florida and any amendments thereto, if any.

David M. Blomberg and Sarah Blomberg
Unit/Week No. 10, in Condominium Parcel Number 5103, of SEAWATCH ON-THE-BEACH, a Condominium, together with an undivided interest in the common elements appurtenant thereto, according to the Declaration of Condominium thereof recorded in Official Records Book 1583, at Page 448, in the Public Records of Lee County, Florida and any amendments thereto, if any.

David M. Blomberg and Sarah Blomberg
Unit/Week No. 11, in Condominium Parcel Number 5103, of SEAWATCH ON-THE-BEACH, a Condominium, together with an undivided interest in the common elements appurtenant thereto, according to the Declaration of Condominium thereof recorded in Official Records Book 1583, at Page 448, in the Public Records of Lee County, Florida and any amendments thereto, if any.

L. Scott Brown and Rita Steele Brown
Unit/Week No. 35, in Condominium Parcel Number 2105, of SEAWATCH ON-THE-BEACH, a Condominium, together with an undivided interest in the common elements appurtenant thereto, according to the Declaration of Condominium thereof recorded in Official Records Book 1583, at Page 448, in the Public Records of Lee County, Florida and any amendments thereto, if any.

Thomas E. Brown and Marian A. Brown
Unit/Week No.15, in Condominium Parcel Number 4102, of SEAWATCH ON-THE-BEACH, a Condominium, together with an undivided interest in the common elements appurtenant thereto, according to the Declaration of Condominium thereof recorded in Official Records Book 1583, at Page 448, in the Public Records of Lee County, Florida and any amendments thereto, if any.

Genevieve S. Buteau
Unit/Week No.34, in Condominium Parcel Number 4104, of SEAWATCH ON-THE-BEACH, a Condominium, together with an undivided interest in the common elements appurtenant thereto, according to the Declaration of Condominium thereof recorded in Official Records Book 1583, at Page 448, in the Public Records of Lee County, Florida and any amendments thereto, if any.

continued on next page

--- ACTIONS / SALES ---

continued from previous page

Clarence E. Dunham and Naydean J. Stubbs
Unit/Week No. 22, in Condominium Parcel Number 7101, of SEAWATCH ON-THE-BEACH, a Condominium, together with an undivided interest in the common elements appurtenant thereto, according to the Declaration of Condominium thereof recorded in Official Records Book 1583, at Page 448, in the Public Records of Lee County, Florida and any amendments thereto, if any.
Richard D. Elliss and Cecelia S. Elliss
Unit/Week No. 19, in Condominium Parcel Number 6104, of SEAWATCH ON-THE-BEACH, a Condominium, together with an undivided interest in the common elements appurtenant thereto, according to the Declaration of Condominium thereof recorded in Official Records Book 1583, at Page 448, in the Public Records of Lee County, Florida and any amendments thereto, if any.
Marcia Fennen
Unit/Week No. 32, in Condominium Parcel Number 1106, of SEAWATCH ON-THE-BEACH, a Condominium, together with an undivided interest in the common elements appurtenant thereto, according to the Declaration of Condominium thereof recorded in Official Records Book 1583, at Page 448, in the Public Records of Lee County, Florida and any amendments thereto, if any.
Antonio A. Gonzalez and Maria V. Gonzalez
Unit/Week No. 28, in Condominium Parcel Number 5104, of SEAWATCH ON-THE-BEACH, a Condominium, together with an undivided interest in the common elements appurtenant thereto, according to the Declaration of Condominium thereof recorded in Official Records Book 1583, at Page 448, in the Public Records of Lee County, Florida and any amendments thereto, if any.
Antonio A. Gonzalez and Maria V. Gonzalez
Unit/Week No. 28, in Condominium Parcel Number 5105, of SEAWATCH ON-THE-BEACH, a Condominium, together with an undivided interest in the common elements appurtenant thereto, according to the Declaration of Condominium thereof recorded in Official Records Book 1583, at Page 448, in the Public Records of Lee County, Florida and any amendments thereto, if any.
Orlando Hernandez
Unit/Week No. 31, in Condominium Parcel Number 6104, of SEAWATCH ON-THE-BEACH, a Condominium, together with an undivided interest in the common elements appurtenant thereto, according to the Declaration of Condominium thereof recorded in Official Records Book 1583, at Page 448, in the Public Records of Lee County, Florida and any amendments thereto, if any.
Rudolph A. Horvath and Marilyn G. Horvath
Unit/Week No. 34, in Condominium Parcel Number 3103, of SEAWATCH ON-THE-BEACH, a Condominium, together with an undivided interest in the common elements appurtenant thereto, according to the Declaration of Condominium thereof recorded in Official Records Book 1583, at Page 448, in the Public Records of Lee County, Florida and any amendments thereto, if any.
Rudolph A. Horvath and Marilyn G. Horvath
Unit/Week No. 35, in Condominium Parcel Number 3103, of SEAWATCH ON-THE-BEACH, a Condominium, together with an undivided interest in the common elements appurtenant thereto, according to the Declaration of Condominium thereof recorded in Official Records Book 1583, at Page 448, in the Public Records of Lee County, Florida and any amendments thereto, if any.
Robert W. Hoenecke and Doris G. Hoenecke - Deceased as Trustees of the Hoenecke Family Trust dtd 2-3-2004
Unit/Week No. 32, in Condominium Parcel Number 5101, of SEAWATCH ON-THE-BEACH, a Condominium, together with an undivided interest in the common elements appurtenant thereto, according to the Declaration of Condominium thereof recorded in Official Records Book 1583, at Page 448, in the Public Records of Lee County, Florida and any amendments thereto, if any.
David N. Kaiser and Kelly R. Kaiser
Unit/Week No. 50, in Condominium Parcel Number 3101, of SEAWATCH ON-THE-BEACH, a Condominium, together with an undivided interest in the common elements appurtenant thereto, according to the Declaration of Condominium thereof recorded in Official Records Book 1583, at Page 448, in the Public Records of Lee County, Florida and any amendments thereto, if any.
Jeffrey W. Kane, Gail Johannson Kane and Anita S. Kane
Unit/Week No. 33, in Condominium Parcel Number 3105, of SEAWATCH ON-THE-BEACH, a Condominium, together with an undivided interest in the common elements appurtenant thereto, according to the Declaration of Condominium thereof recorded in Official Records Book 1583, at Page 448, in the Public Records of Lee County, Florida and any amendments thereto, if any.
Linda J. Ladue
Unit/Week No. 36, in Condominium Parcel Number 4101, of SEAWATCH ON-THE-BEACH, a Condominium, together with an undivided interest in the common elements appurtenant thereto, according to the Declaration of Condominium thereof recorded in Official Records Book 1583, at Page 448, in the Public Records of Lee County, Florida and any amendments thereto, if any.
Louis A. Maciel and Susana M. Maciel
Unit/Week No. 35, in Condominium Parcel Number 2106, of SEAWATCH ON-THE-BEACH, a Condominium, together with an undivided interest in the common elements appurtenant thereto, according to the Declaration of Condominium thereof recorded in Official Records Book 1583, at Page 448, in the Public Records of Lee County, Florida and any amendments thereto, if any.
Raymond J. Murphy and Irene Murphy
Unit/Week No. 2, in Condominium Parcel Number 4106, of SEAWATCH ON-THE-BEACH, a Condominium, together with an undivided interest in the common elements appurtenant thereto, according to the Declaration of Condominium thereof recorded in Official Records Book 1583, at Page 448, in the Public Records of Lee County, Florida and any amendments thereto, if any.
Enrico Odorico and Barbara Winn Odorico
Unit/Week No. 20, in Condominium Parcel Number 4101, of SEAWATCH ON-THE-BEACH, a Condominium, together with an undivided interest in the common elements appurtenant thereto, according to the Declaration of Condominium thereof recorded in Official Records Book 1583, at Page 448, in the Public Records of Lee County, Florida and any amendments thereto, if any.
Kenneth D. Parkin and Sharon E. Parkin
Unit/Week No. 48, in Condominium Parcel Number 5105, of SEAWATCH ON-THE-BEACH, a Condominium, together with an undivided interest in the common elements appurtenant thereto, according to the Declaration of Condominium thereof recorded in Official Records Book 1583, at Page 448, in the Public Records of Lee County, Florida and any amendments thereto, if any.
John M. Popadak and Nancy A. Medvid
Unit/Week No. 50, in Condominium Parcel Number 5105, of SEAWATCH ON-THE-BEACH, a Condominium, together with an undivided interest in the common elements appurtenant thereto, according to the Declaration of Condominium thereof recorded in Official Records Book 1583, at Page 448, in the Public Records of Lee County, Florida and any amendments thereto, if any.
Raymond W. Robinson and Maria A. Robinson
Unit/Week No. 42, in Condominium Parcel Number 3105, of SEAWATCH ON-THE-BEACH, a Condominium, together with an undivided interest in the common elements appurtenant thereto, according to the Declaration of Condominium thereof recorded in Official Records Book 1583, at Page 448, in the Public Records of Lee County, Florida and any amendments thereto, if any.
Donald R. Smith and Joan E. Smith
Unit/Week No. 36, in Condominium Parcel Number 6105, of SEAWATCH ON-THE-BEACH, a Condominium, together with an undivided interest in the common elements appurtenant thereto, according to the Declaration of Condominium thereof recorded in Official Records Book 1583, at Page 448, in the Public Records of Lee County, Florida and any amendments thereto, if any.
Tiffany M. Stoltz
Unit/Week No. 36, in Condominium Parcel Number 4105, of SEAWATCH ON-THE-BEACH, a Condominium, together with an undivided interest in the common elements appurtenant thereto, according to the Declaration of Condominium thereof recorded in Official Records Book 1583, at Page 448, in the Public Records of Lee County, Florida and any amendments thereto, if any.
John Thompson
Unit/Week No. 48, in Condominium Parcel Number 4102, of SEAWATCH ON-THE-BEACH, a Condominium, together with an undivided interest in the common elements appurtenant thereto, according to the Declaration of Condominium thereof recorded in Official Records Book 1583, at Page 448, in the Public Records of Lee County, Florida and any amendments thereto, if any.
Harold Vinson and Andrea Vinson
Unit/Week No. 35, in Condominium Parcel Number 4102, of SEAWATCH ON-THE-BEACH, a Condominium, together with an undivided interest in the common elements appurtenant thereto, according to the Declaration of Condominium thereof recorded in Official Records Book 1583, at Page 448, in the Public Records of Lee County, Florida and any amendments thereto, if any.
Stephen W. Zuck and Kathleen A. Zuck
Unit/Week No. 1, in Condominium Parcel Number 1102, of SEAWATCH ON-THE-BEACH, a Condominium, together with an undivided interest in the common elements appurtenant thereto, according to the Declaration of Condominium thereof recorded in Official Records Book 1583, at Page 448, in the Public Records of Lee County, Florida and any amendments thereto, if any.

Goede, DeBoest & Cross
Kristie Mace, Esq.
2030 McGregor Blvd.
Fort Myers, FL 33966
(P) 239-332-2992
(F) 239-333-2999
Website: www.gadclaw.com
October 9, 16, 2026 26-04240L

SECOND INSERTION

NOTICE OF FORECLOSURE SALE PURSUANT TO CHAPTER 45
IN THE CIRCUIT COURT OF THE TWENTIETH JUDICIAL CIRCUIT IN AND FOR LEE COUNTY, FLORIDA
26-CA-002003
ROCKET MORTGAGE, LLC,
Plaintiff, VS.
LEONARD A. RAPUANO; UNKNOWN SPOUSE OF LEONARD A. RAPUANO; TECHNOLOGY CREDIT UNION; UNKNOWN TENANT #1; UNKNOWN TENANT #2,
Defendant(s).

NOTICE IS HEREBY GIVEN that sale will be made pursuant to an Order or Final Judgment. Final Judgment was awarded on September 24, 2026 in Civil Case No. 26-CA-002003, of the Circuit Court of the TWENTIETH Judicial Circuit in and for Lee County, Florida, wherein, ROCKET MORTGAGE, LLC is the Plaintiff, and LEONARD A. RAPUANO and TECHNOLOGY CREDIT UNION are Defendants.

The Clerk of the Court, Kevin C. Karnes will sell to the highest bidder for cash at www.lee.realforeclose.com on November 19, 2026 at 09:00:00 AM EST the following described real property as set forth in said Final Judgment, to wit:

LOTS 1 AND 2, BLOCK 3007, UNIT NO. 43, CAPE CORAL SUBDIVISION, ACCORDING TO THE PLAT THEREOF, RECORDED IN PLAT BOOK 17, PAGES 48 THROUGH 57, INCLUSIVE, OF THE PUBLIC RECORDS OF LEE COUNTY, FLORIDA.

Any person claiming an interest in the surplus from the sale, if any, other than the property owner as of the date of the lis pendens must file a claim before the clerk reports the surplus as unclaimed.

If you are a person with a disability who needs any accommodation in order to participate in this proceeding, you are entitled, at no cost to you, to the provision of certain assistance. Please contact Brooke Dean, Operations Division Manager, whose office is located at Lee County Justice Center, 1700 Monroe Street, Fort Myers, Florida 33901, and whose telephone number is (239) 533-1771, at least 7 days before your scheduled court appearance, or immediately upon receiving this notification if the time before the scheduled appearance is less than 7 days; if you are hearing or voice impaired, call 711.

WITNESS my hand and the seal of the court on 10/05/2026

CLERK OF THE COURT
Kevin C. Karnes
(SEAL) N Wright-Angad
Deputy Clerk

ALDRIDGE PITE, LLP
Attorney for Plaintiff
401 W. Linton Blvd.,
Suite 202-B
Delray Beach, FL 33444
Telephone: 561-392-6391
Facsimile: 561-392-6965
Primary E-Mail:
ServiceMail@aldridgepite.com
1271-045B
Ref# 26904
October 9, 16, 2026 26-04324L

SECOND INSERTION

NOTICE OF FORECLOSURE SALE
IN THE CIRCUIT COURT OF THE TWENTIETH JUDICIAL CIRCUIT IN AND FOR LEE COUNTY, FLORIDA
CASE NO.: 25-CA-005994
NEWREZ LLC D/B/A SHELLPOINT MORTGAGE SERVICING,
Plaintiff, v.
THE UNKNOWN HEIRS, DEVISEES, GRANTEES, ASSIGNEES, CREDITORS, LIENORS AND TRUSTEES OF MICHAEL COBURN, DECEASED; RICHARD W. STOKES; MISTY D. STOKES; MONTABELLE BISHOP; MYRA LEA COBURN A/K/A MYRA LEA TETRO A/K/A MYRA COBURN A/K/A MYRA COOK AKA MIRA COBURN; UNKNOWN PARTIES CLAIMING INTERESTS BY, THROUGH, UNDER OR AGAINST A NAMED DEFENDANT TO THIS ACTION, OR HAVING OR CLAIMING TO HAVE ANY RIGHT, TITLE OR INTEREST IN THE PROPERTY HEREIN DESCRIBED; UNKNOWN TENANT #1 NKA MIRA COBURN,
Defendant(s).

NOTICE IS HEREBY GIVEN pursuant to an In Rem Final Judgment of Foreclosure or Order dated September 30, 2026 entered in Civil Case No. 25-CA-005994 in Circuit Court of the 20th Judicial Circuit in and for Lee County, Florida, wherein NEWREZ LLC D/B/A SHELLPOINT MORTGAGE SERVICING, Plaintiff and THE UNKNOWN HEIRS, DEVISEES, GRANTEES, ASSIGNEES, CREDITORS, LIENORS AND TRUSTEES OF MICHAEL COBURN, DECEASED; RICHARD W. STOKES; MISTY D. STOKES; MONTABELLE BISHOP; MYRA LEA COBURN A/K/A MYRA LEA TETRO A/K/A MYRA COBURN A/K/A MYRA COOK AKA MIRA COBURN; UNKNOWN TENANT #1 N/K/A MIRA COBURN are Defendant(s), Kevin Karnes, Clerk of Court, will sell to the highest and best bidder for cash beginning at 9:00 A.M. at www.lee.realforeclose.com in accordance with Chapter 45, Florida Statutes on November 19, 2026 the following described property as set forth in said In Rem Final Judgment of Foreclosure, to-wit:

LOTS 6 AND 7, BLOCK 16, UNIT NO. 1, FORT MYERS SHORES, A SUBDIVISION ACCORDING TO THE PLAT OR MAP THEREOF AS RECORDED IN PLAT BOOK 9, AT PAGES 151 THROUGH 154, OF THE PUBLIC RECORDS OF LEE COUNTY, FLORIDA.
Property Address: 12649 4th St, Fort Myers, FL 33905

ANY PERSON CLAIMING AN INTEREST IN THE SURPLUS FROM THE SALE, IF ANY, OTHER THAN THE PROPERTY OWNER AS OF THE DATE OF THE LIS PENDENS MUST FILE A CLAIM BEFORE THE CLERK REPORTS THE SURPLUS AS UNCLAIMED.

THE COURT, IN ITS DISCRETION, MAY ENLARGE THE TIME OF THE SALE. NOTICE OF THE CHANGED TIME OF SALE SHALL BE PUBLISHED AS PROVIDED HEREIN.

10/05/2026

KEVIN KARNES
CLERK OF THE CIRCUIT COURT
Lee County, Florida
(SEAL) T Mann
DEPUTY CLERK OF COURT

Submitted By: Vanessa Nieto, Esq.
Kelley Kronenberg
10360 West State Road 84
Fort Lauderdale, FL 33324
Service E-mail:
ftlrealprop@kelleykronenberg.com
File No.: 2390.001022
October 9, 16, 2026 26-04294L

SECOND INSERTION

NOTICE OF FORECLOSURE SALE
IN THE CIRCUIT COURT OF THE TWENTIETH JUDICIAL CIRCUIT IN AND FOR LEE COUNTY, FLORIDA
CASE NO.: 26-CA-002096
NEWREZ LLC,
Plaintiff, vs.
JULIE M. CARVER; UNKNOWN SPOUSE OF JULIE M. CARVER; COUNTRY PINES OF NORTH FORT MYERS CONDOMINIUM ASSOCIATION, INC.; UNITED STATES OF AMERICA; UNKNOWN TENANT(S) IN POSSESSION #1 and #2, and ALL OTHER UNKNOWN PARTIES, et.al.,
Defendant(s).

NOTICE IS HEREBY GIVEN pursuant to a Final Summary Judgment of Foreclosure dated September 17, 2026, entered in Civil Case No.: 26-CA-002096 of the Circuit Court of the Twentieth Judicial Circuit in and for Lee County, Florida, wherein NEWREZ LLC, Plaintiff, and JULIE M. CARVER; COUNTRY PINES OF NORTH FORT MYERS CONDOMINIUM ASSOCIATION, INC.; UNITED STATES OF AMERICA, are Defendants.

I will sell to the highest bidder for cash, at www.lee.realforeclose.com, at 9:00 AM, on the 19th day of November, 2026, the following described real property as set forth in said Judgment, to wit:

UNIT 1204, COUNTRY PINES, PHASE III, A CONDOMINIUM, ACCORDING TO THE DECLARATION OF CONDOMINIUM THEREOF, AS RECORDED IN OFFICIAL RECORDS BOOK 1639, PAGES 2179 THROUGH 2240, OF THE PUBLIC RECORDS OF LEE COUNTY, FLORIDA, AND ANY AMENDMENTS THERETO; TOGETHER WITH ITS UNDIVIDED SHARE IN THE COMMON ELEMENTS.

If you are a person claiming a right to funds remaining after the sale, you must file a claim with the clerk before the clerk reports the surplus as unclaimed. If you fail to file a timely claim you will not be entitled to any remaining funds. After the funds are reported as unclaimed, only the owner of record as of the date of the Lis Pendens may claim the surplus.

WITNESS my hand and the seal of the court on 10/05/2026.

KEVIN C. KARNES
CLERK OF THE COURT
(SEAL) By: N Wright-Angad
Deputy Clerk

Attorney for Plaintiff:
Brian L. Rosaler, Esquire
Popkin & Rosaler, P.A.
1701West Hillsboro Boulevard, Ste 400
Deerfield Beach, FL 33442
Telephone: (954) 360-9030;
Facsimile: (954) 420-5187
26-52941
October 9, 16, 2026 26-04325L

SECOND INSERTION

NOTICE OF FORECLOSURE SALE PURSUANT TO CHAPTER 45
IN THE CIRCUIT COURT OF THE TWENTIETH JUDICIAL CIRCUIT IN AND FOR LEE COUNTY, FLORIDA
25-CA-006741
AMERISAVE MORTGAGE CORPORATION,
Plaintiff, VS.
MICHELLE LYNN WOOTEN A/K/A MICHELLE WOOTEN; LINCOLN WOOTEN, JR.; UNITED STATES OF AMERICA BY AND THROUGH THE SMALL BUSINESS ADMINISTRATION; UNKNOWN TENANT #1; UNKNOWN TENANT #2
Defendant(s).

NOTICE IS HEREBY GIVEN that sale will be made pursuant to an Order or Final Judgment. Final Judgment was awarded on August 24, 2026 in Civil Case No. 25-CA-006741, of the Circuit Court of the Judicial Circuit in and for Lee County, Florida, wherein, AMERISAVE MORTGAGE CORPORATION is the Plaintiff, and MICHELLE LYNN WOOTEN A/K/A MICHELLE WOOTEN; LINCOLN WOOTEN, JR.; UNITED STATES OF AMERICA BY AND THROUGH THE SMALL BUSINESS ADMINISTRATION are Defendants.

The Clerk of the Court, Kevin C. Karnes will sell to the highest bidder for cash at www.lee.realforeclose.com on November 5, 2026 at 09:00:00 AM EST the following described real property as set forth in said Final Judgment, to wit:

LOT 26, AMENDED PLAT MARINE HOMES SUBDIVISION, ACCORDING TO THE MAP OR PLAT THEREOF, AS RECORDED IN PLAT BOOK 11, PAGE(S) 65, OF THE PUBLIC RECORDS OF LEE COUNTY, FLORIDA.

Any person claiming an interest in the surplus from the sale, if any, other than the property owner as of the date of the lis pendens must file a claim before the clerk reports the surplus as unclaimed.

WITNESS my hand and the seal of the court on 10/07/2026.

CLERK OF THE COURT
Kevin C. Karnes
(SEAL) T Mann
Deputy Clerk

ALDRIDGE PITE, LLP
Attorney for Plaintiff
401 W. Linton Blvd.
Suite 202-B
Delray Beach, FL 33444
Telephone: 561-392-6391
Facsimile: 561-392-6965
Primary E-Mail:
ServiceMail@aldridgepite.com
1100-1127B
Ref# 27033
October 9, 16, 2026 26-04352L

CONTACT US!
Businessobserverfl.com

--- ACTIONS / SALES ---

SECOND INSERTION

NOTICE OF FORECLOSURE SALE
IN THE CIRCUIT COURT FOR THE TWENTIETH JUDICIAL CIRCUIT IN AND FOR LEE COUNTY, FLORIDA
CIVIL DIVISION
Case No.: 25-CA-002748
NEWTEK BANK, NATIONAL ASSOCIATION,
Plaintiff, vs.
BUILT SOLID RENOVATIONS, LLC, a Michigan limited liability company; HACKSAW JACKSON HOLDINGS LLC d/b/a Rock Solid Exteriors, a Michigan limited liability company; LEVI MOORE, an individual; UNKNOWN SPOUSE OF LEVI MOORE, an individual; ABL RPC RESIDENTIAL CREDIT ACQUISITION, LLC, a Delaware limited liability company; JANE/JOHN DOE, fictitious names representing unknown tenants in possession; and ALL UNKNOWN PARTIES CLAIMING INTERESTS BY, THROUGH, UNDER OR AGAINST A NAMED DEFENDANT TO THIS ACTION, OR HAVING OR CLAIMING TO HAVE ANY RIGHT, TITLE OR INTEREST IN THE PROPERTY HEREIN DESCRIBED,
Defendants.

NOTICE is hereby given that, pursuant to the Order Granting Plaintiff's Motion to Reset Foreclosure Sale entered on October 2, 2026 in the above-referenced matter pending in the Circuit Court of the Twentieth Judicial Circuit in and for Lee County, Florida, Kevin C. Karnes, the Clerk of this Court, will sell the following described property situated in Lee County, Florida:

Lot(s) 5 and 6, Block 4544, Cape Coral, Unit 44, Part 1, according to the map or plat thereof, as recorded in Plat Book 21, Page(s) 113 through 121, inclusive, of the Public Records of Lee County, Florida.

Together with all improvements now or hereafter erected on the property, and all easements, appurtenances, and fixtures now or hereafter a part of the property.

The Real Property or its address is commonly known as: 508 Cape Coral Parkway West
Cape Coral, FL 33914

at public sale, to the highest and best bidder, for cash, on November 5, 2026, beginning at 9:00 a.m., to be conducted electronically online at the following website: http://www.lee.realforclose.com.

Any person claiming an interest in the surplus from the sale, if any, other than the property owner as of the date of the Lis Pendens must file a claim in accordance with Florida Statutes, Section 45.031.

10/02/2026

Kevin C. Karnes
Clerk of the Circuit Court & Comptroller
(SEAL) By: N Wright-Angad
Deputy Clerk

STEPHANIE C. LIEB
Florida Bar No.: 31806
slieb@trenam.com
Trenam Law
101 East Kennedy Boulevard,
Suite 2700
Tampa, Florida 33602
Tel: (813) 223-7474 |
Fax: (813) 229-6553
Attorney for Plaintiff
October 9, 16, 2026 26-04282L

SECOND INSERTION

NOTICE OF FORECLOSURE SALE
IN THE CIRCUIT COURT OF THE 20TH JUDICIAL CIRCUIT, IN AND FOR LEE COUNTY, FLORIDA.
CASE No. 25-CA-003928
SUN WEST MORTGAGE COMPANY, INC.,
Plaintiff, vs.
KYLE W. BAKER AKA KYLE WILLIAM BAKER, AS PERSONAL REPRESENTATIVE OF THE ESTATE OF INGEBORG G. APPLETON AKA INGEBORG GISELA APPLETON, DECEASED, et. al.,
Defendants.

NOTICE IS HEREBY GIVEN pursuant to an Order or Final Judgment entered in Case No. 25-CA-003928 of the Circuit Court of the 20TH Judicial Circuit in and for LEE County, Florida, wherein, SUN WEST MORTGAGE COMPANY, Plaintiff, and KYLE W. BAKER AKA KYLE WILLIAM BAKER, AS PERSONAL REPRESENTATIVE OF THE ESTATE OF INGEBORG G. APPLETON AKA INGEBORG GISELA APPLETON, DECEASED, et. al., are Defendants, I will sell to the highest bidder for cash at, WWW.LEE.REALFORECLOSE.COM, at the hour of 9:00 A.M., on the 28th day of January 2027, the following described property:

UNIT 8, RIVER PLACE, A TRACT OR PARCEL OF LAND SITUATED IN THE STATE OF FLORIDA, COUNTY OF LEE, CITY OF FORT MYERS LYING IN GOVERNMENT LOT 1, SECTION 7, TOWNSHIP 44 SOUTH, RANGE 25 EAST, BEING FURTHER DESCRIBED AS FOLLOWS:

COMMENCING AT THE NORTHWEST CORNER OF THE SOUTHWEST QUARTER OF THE NORTHWEST QUARTER OF SAID SECTION 7; THENCE S 39 DEGREES 45 MINUTES 00 SECONDS E ALONG THE SOUTHWESTERLY SIDE OF PRINCESS STREET AS SHOWN ON THE PLAT OF FAIRVIEW (HENDRY, FOXWORTHY, AND FRIERSON`S ADDITION TO EAST FORT MYERS) ACCORDING TO A MAP OR PLAT THEREOF RECORDED IN PLAT BOOK 3, AT PAGE 60 OF THE PUBLIC RECORDS OF LEE COUNTY, FLORIDA, FOR 533.37 FEET TO AN INTERSECTION WITH THE NORTHWESTERLY LINE OF EDGEWOOD AVENUE (FORMERLY TRAVERS AVENUE) AS SHOWN ON SAID PLAT; THENCE S 50 DEGREES 30 MINUTES 00 SECONDS W ALONG SAID NORTHWESTERLY LINE FOR 784.84 FEET; THENCE S 50 DEGREES 30 MINUTES 00 SECONDS W ALONG SAID NORTHWESTERLY LINE FOR 163.59 FEET; THENCE N 40 DEGREES 47 MINUTES 30 SECONDS W FOR 336.85 FEET; THENCE N 49 DEGREES 12 MINUTES 30 SECONDS E FOR 51.41 FEET TO THE FACE OF A CONCRETE WALL BEING THE POINT OF BEGINNING OF THE HEREIN DESCRIBED PARCEL; THENCE N 06 DEGREES 22 MINUTES 08 SECONDS W ALONG SAID FACE OF WALL FOR 24.00 FEET; THENCE N 83 DEGREES 37 MINUTES 52 SECONDS E FOR 0.33 FEET TO THE CENTER OF A PARTY WALL; THENCE N 06 DEGREES 22 MINUTES 08 SECONDS W ALONG SAID PARTY WALL FOR 24.50 FEET; THENCE N 82 DEGREES 37 MINUTES 52 SECONDS E ALONG THE FACE OF A CONCRETE WALL FOR 24.66 FEET; THENCE S 06 DEGREES 22 MINUTES 08 SECONDS E ALONG THE FACE OF A CONCRETE WALL FOR 24.00 FEET; THENCE S 83 DEGREES 37 MINUTES 52 SECONDS W FOR 0.33 FEET TO THE CENTER OF A PARTY WALL; THENCE S 06 DEGREES 22 MINUTES 08 SECONDS E ALONG SAID PARTY WALL FOR 24.50 FEET; THENCE S 83 DEGREES 37 MINUTES 52 SECONDS W ALONG THE FACE OF A CONCRETE WALL FOR 24.66 FEET TO THE POINT OF BEGINNING.

TOGETHER WITH BOAT SLIP NO. 2, PURSUANT TO SECTION 11.3 OF AN INSTRUMENT IN OFFICIAL RECORDS BOOK 3893, PAGE 4136, PUBLIC RECORDS OF SAID COUNTY.

Any person claiming an interest in the surplus from the sale, if any, must file a claim per the requirements set forth in FL Stat. 45.032.

DATED this day of 10/02/2026

KEVIN C. KARNES
Clerk Circuit Court
(SEAL) By: N Wright-Angad
Deputy Clerk

Submitted by: Michele Clancy
GREENSPOON MARDER, LLP
100 West Cypress Creek Road
Trade Centre South,
Suite 700
Fort Lauderdale, FL 33309
954-491-1120
(23-001671)
October 9, 16, 2026 26-04281L

LV18237_V13

Q&A

Who benefits from legal notices?

You do. Legal notices are required because a government body or corporation wants to take action that can affect individuals and the public at large.

When the government is about to change your life, or your property or assets are about to be taken, public notices in newspapers serve to alert those affected.

SECOND INSERTION

NOTICE OF FORECLOSURE SALE
IN THE CIRCUIT COURT OF THE 20TH JUDICIAL CIRCUIT, IN AND FOR LEE COUNTY, FLORIDA
CIVIL DIVISION:
CASE NO.: 26-CA-001296
SENECA MORTGAGE SERVICING LLC,
Plaintiff, vs.
MARTIN H. HAZELHORST; UNKNOWN SPOUSE OF MARTIN H. HAZELHORST; THE ESTERO BEACH AND TENNIS CLUB, INC.; UNKNOWN TENANT #1 AND UNKNOWN TENANT #2,
Defendants.

NOTICE IS HEREBY GIVEN pursuant to Final Judgment of Foreclosure dated the 24th day of September, 2026, and entered in Case No. 26-CA-001296, of the Circuit Court of the 20TH Judicial Circuit in and for LEE County, Florida, wherein SENECA MORTGAGE SERVICING LLC, is the Plaintiff and MARTIN H. HAZELHORST, THE ESTERO BEACH AND TENNIS CLUB, INC., UNKNOWN TENANT #1, and UNKNOWN TENANT #2 defendants. The Clerk of this Court shall sell to the highest and best bidder for cash electronically at www.Lee.realforeclose.com in accordance with Chapter 45, Florida Statutes at, 9:00 AM on the 29th day of October, 2026 the following described property as set forth in said Final Judgment, to wit:

ALL THAT CERTAIN LAND SITUATED IN LEE, FLORIDA, VIZ: UNIT NO. B-1007 OF ESTERO BEACH AND TENNIS CLUB, A CONDOMINIUM, ACCORDING TO THE DECLARATION OF CONDOMINIUM THEREOF RECORDED IN OFFICIAL RECORDS BOOK 1357, PAGE 125, OF THE PUBLIC RECORDS OF LEE COUNTY, FLORIDA, AND ALL AMENDMENTS THERETO, TOGETHER WITH ITS UNDIVIDED SHARE IN THE COMMON ELEMENTS.

A/K/A 7330 ESTERO BLVD 1007B FT MYERS BEACH, FL 33931

ANY PERSON CLAIMING AN INTEREST IN THE SURPLUS FROM THE SALE, IF ANY, OTHER THAN THE PROPERTY OWNER AS OF THE DATE OF THE LIS PENDENS MUST FILE A CLAIM WITH THE CLERK BEFORE THE CLERK REPORTS THE SURPLUS AS UNCLAIMED.

Dated this day of 10/01/2026,

KEVIN C. KARNES
Clerk of the Circuit Court
(SEAL) By: N Wright-Angad
Deputy Clerk

Submitted by:
DELUCA LAW GROUP PLLC.
ATTORNEY FOR THE PLAINTIFF
2101 NE 26TH STREET
FORT LAUDERDALE, FL 33305
TELEPHONE: (954) 368-1311 |
FAX: (954) 200-8649
DESIGNATED PRIMARY E-MAIL FOR SERVICE PURSUANT TO FLA. R. JUD. ADMIN 2.516
Service@delucalawgroup.com
25-07052-1
October 9, 16, 2026 26-04267L

SECOND INSERTION

NOTICE OF FORECLOSURE SALE
IN THE CIRCUIT COURT OF THE TWENTIETH JUDICIAL CIRCUIT IN AND FOR LEE COUNTY, FLORIDA
CASE NO.: 26-CA-001458
U.S. BANK NATIONAL ASSOCIATION, AS INDENTURE TRUSTEE, FOR LHOME MORTGAGE TRUST 2024-RTL3, MORTGAGE-BACKED NOTES, SERIES 2024-RTL3,
Plaintiff, v.
CELHART PROPERTIES, LLC, a Florida Limited Liability Company; JENNIFER MURRAY, an Individual; FAIRVIEW ISLES IMPROVEMENT ASSOCIATION, INC.; UNKNOWN TENANT #1; UNKNOWN TENANT #2,
Defendant(s),

NOTICE IS HEREBY GIVEN pursuant to Final Judgment dated September 30, 2026 entered in Civil Case No. 26-CA-001458 in Circuit Court of the 20th Judicial Circuit in and for County, Florida, wherein U.S. BANK NATIONAL ASSOCIATION, AS INDENTURE TRUSTEE, FOR LHOME MORTGAGE TRUST 2024-RTL3, MORTGAGE-BACKED NOTES, SERIES 2024-RTL3, Plaintiff and CELHART PROPERTIES, LLC, a Florida Limited Liability Company; JENNIFER MURRAY, an Individual; FAIRVIEW ISLES IMPROVEMENT ASSOCIATION, INC. are Defendant(s), Kevin C. Karnes, Clerk of Court, will sell to the highest and best bidder for cash beginning at 9:00 AM at www.lee.realforeclose.com accordance with Chapter 45, Florida Statutes on October 29, 2026 the following described property as set forth in said Final Judgment, to-wit:

LOT 1, UNIT 5, FAIRVIEW ISLES, ACCORDING TO THE MAP OR PLAT THEREOF, AS RECORDED IN PLAT BOOK 10, PAGE(S) 125, OF THE PUBLIC RECORDS OF LEE COUNTY, FLORIDA.

Property Address: 32 FAIRVIEW BLVD, FORT MYERS BEACH, FL, 33931

ANY PERSON CLAIMING AN INTEREST IN THE SURPLUS FROM THE SALE, IF ANY, OTHER THAN THE PROPERTY OWNER AS OF THE DATE OF THE LIS PENDENS MUST FILE A CLAIM BEFORE THE CLERK REPORTS THE SURPLUS AS UNCLAIMED.

THE COURT, IN ITS DISCRETION, MAY ENLARGE THE TIME OF THE SALE. NOTICE OF THE CHANGED TIME OF SALE SHALL BE PUBLISHED AS PROVIDED HEREIN.

10/01/2026

Kevin C. Karnes
CLERK OF THE CIRCUIT COURT
Lee County, Florida
(SEAL) T Mann
DEPUTY CLERK OF COURT

Submitted By: Vanessa Nieto
Kelley Kronenberg
10360 West State Road 84
Fort Lauderdale, FL 33324
Service E-mail:
ftlrealprop@kelleykronenberg.com
File No.: 3843.000419
October 9, 16, 2026 26-04262L

SECOND INSERTION

NOTICE OF FORECLOSURE SALE
IN THE CIRCUIT COURT FOR THE TWENTIETH JUDICIAL CIRCUIT IN AND FOR LEE COUNTY, FLORIDA
CIVIL DIVISION
Case No.: 25-CA-005628
NEWTEK BANK, NATIONAL ASSOCIATION,
Plaintiff, vs.
AEE PARTNERS, LLC; BRAYAN ACOSTA FIANDOR; JLAG LUXE CONSTRUCTION, LLC; YANET ECHENIQUE, and all known or unknown subcontractors, sub-sub-contractors, and materialmen who may claim a right to file a lien; and ALL UNKNOWN PARTIES CLAIMING INTERESTS BY, THROUGH, UNDER OR AGAINST A NAMED DEFENDANT TO THIS ACTION, OR HAVING OR CLAIMING TO HAVE ANY RIGHT TITLE OR INTEREST IN THE PROPERTY HEREIN DESCRIBED,
Defendants.

NOTICE IS HEREBY GIVEN that pursuant to the Final Judgment of Foreclosure as to Counts IV and VIII of the Complaint (the "Judgment"), in the above-referenced matter pending in the Circuit Court of the Twentieth Judicial Circuit in and for Lee County, Florida, the Clerk of this Court will sell to the highest and best bidder, for cash online at www.lee.realforeclose.com, on November 19, 2026 at 9:00 a.m., the following described properties as set forth in the Judgment:

Parcel 1: Lot 7, Block 32, LEHIGH ACRES, Unit 8, Section 36, Township 44 South, Range 27 East, according to the map or plat thereof, as recorded in Plat Book 15, Page(s) 54 and Deed Book 254, Page 25, of the Public Records of Lee County, Florida.

The Real Property or its address is commonly known as:
210 Wells Ave., Lehigh Acres FL 33936

Parcel 2: Lot 15, Block 21, Unit 6, LEHIGH ACRES, Section 14, Township 44 South, Range 27 East, according to the Map or Plat thereof, as recorded in Plat Book 15, Page(s) 16 and Deed Book 254, Page 80, of the Public Records of Lee County, Florida.

The Real Property or its address is commonly known as:
1305 Roosevelt Ave., Lehigh Acres, FL 33972

Together with all improvements now or hereafter erected on the properties, and all easements, appurtenances, and fixtures now or hereafter a part of the properties.

ANY PERSON CLAIMING AN INTEREST IN THE SURPLUS FROM THE SALE, IF ANY, OTHER THAN THE PROPERTY OWNER AS OF THE DATE OF THE LIS PENDENS MUST FILE A CLAIM BEFORE THE CLERK REPORTS THE SURPLUS AS UNCLAIMED.

Dated: October 1, 2026.

KEVIN C. KARNES
CLERK OF THE CIRCUIT COURT
(SEAL) BY: T Mann
Deputy Clerk

/s/ Anthony P. Marzocca
STEPHANIE C. LIEB
Florida Bar No.: 31806
slieb@trenam.com
ANTHONY P. MARZOCCA
Florida Bar No.: 1068857
amarzocca@trenam.com
TRENAM, KEMKER, SCHARF, BARKIN, FRYE, O'NEILL & MULLIS, P.A.
101 East Kennedy Boulevard,
Suite 2700
Tampa, Florida 33602
Tel: (813) 223-7474 |
Fax: (813) 229-6553
Attorneys for Newtek Bank, National Association
October 9, 16, 2026 26-04260L

SECOND INSERTION

NOTICE OF SALE PURSUANT TO CHAPTER 45
IN THE CIRCUIT COURT OF THE 20TH JUDICIAL CIRCUIT, IN AND FOR LEE COUNTY, FLORIDA
CASE NO.: 26-CA-001994
FEDERAL HOME LOAN MORTGAGE CORPORATION, AS TRUSTEE OF THE FREDDIE MAC SLST 2025-2 PARTICIPATION INTEREST TRUST,
Plaintiff, v.
AMANDA HART, et al,
Defendant(s).

NOTICE IS HEREBY GIVEN that pursuant to a Final Judgment in Foreclosure entered on September 24, 2026 and entered in Case No. 26-CA-001994 in the Circuit Court of the 20th Judicial Circuit in and for Lee County, Florida, wherein AMANDA HART, et al, are the Defendants. The Clerk of the Court, KEVIN KARNES, will sell to the highest bidder for cash at www.lee.realforeclose.com on November 19, 2026 at 9:00am, the following described real property as set forth in said Final Judgment, to wit:

LOT(S) 41 AND 42, BLOCK 3090, CAPE CORAL UNIT 62, ACCORDING TO THE MAP OR PLAT THEREOF, AS RECORDED IN PLAT BOOK 21, PAGE(S) 21 THROUGH 38, INCLUSIVE, OF THE PUBLIC RECORDS OF LEE COUNTY, FLORIDA.

and commonly known as: 1724 SW 3RD PL, CAPE CORAL, FL 33991 (the "Property").

ANY PERSON CLAIMING AN INTEREST IN THE SURPLUS FROM THE SALE, IF ANY, OTHER THAN THE PROPERTY OWNER AS OF THE DATE OF THE LIS PENDENS MUST FILE A CLAIM WITHIN 60 DAYS AFTER THE SALE.

WITNESS my hand and the seal of the court on 10/05/2026

Kevin C. Karnes
As Clerk of the Circuit Court
Lee County, Florida
(SEAL) N Wright-Angad
DEPUTY CLERK

GHIDOTTI | BERGER LLP
Attorneys for Plaintiff
10800 Biscayne Blvd., Suite 201
Miami, FL 33161
Telephone: (305) 501-2808
Facsimile: (954) 780-5578
By: /s/ Rebecca E. Smith
Jason Duggar, Esq.
FL Bar No.: 83813
Christophal Hellewell, Esq.
FL Bar No.: 114230
Anya E. Macias, Esq.
FL Bar No.: 0458600
Tara Rosenfeld, Esq.
FL Bar No.: 59454
Johanni Fernandez-Marmol, Esq.
FL Bar No.: 1055042
Jimmy Edwards, Esq.
FL Bar No.: 81855
Rebecca E. Smith, Esq.
FL Bar No.: 1069865
Spencer Gollahon, Esq.
FL Bar No.: 647799
Paris Roach, Esq. FL Bar No.: 1028751
fcpleadings@ghidottiberger.com
October 9, 16, 2026 26-04300L

SECOND INSERTION

NOTICE OF FORECLOSURE SALE
IN THE CIRCUIT COURT OF THE TWENTIETH JUDICIAL CIRCUIT, IN AND FOR LEE COUNTY, FLORIDA
CASE NO. 26-CA-000798
THIRD FEDERAL SAVINGS AND LOAN ASSOCIATION OF CLEVELAND,
Plaintiff, vs.
SCOTT E. FRANTZ; SANIBEL WAY CONDOMINIUM ASSOCIATION, INC.;
Defendants

NOTICE IS HEREBY GIVEN pursuant to a Final Judgment in Mortgage Foreclosure dated September 30, 2026, and entered in Case No. 26-CA-000798, of the Circuit Court of the Twentieth Judicial Circuit in and for LEE County, Florida. THIRD FEDERAL SAVINGS AND LOAN ASSOCIATION OF CLEVELAND (hereafter "Plaintiff"), is Plaintiff and SCOTT E. FRANTZ; SANIBEL WAY CONDOMINIUM ASSOCIATION, INC., are defendants. Kevin C Karnes, Clerk of the Circuit Court for LEE, County Florida will sell to the highest and best bidder for cash Via the internet at www.lee.realforeclose.com, at 9:00 a.m., on the 29TH day of OCTOBER, 2026, the following described property as set forth in said Final Judgment, to wit:

BUILDING A, UNIT 2, SANIBEL WAY CONDOMINIUM, A CONDOMINIUM ACCORDING TO THE DECLARATION THEREOF RECORDED IN OFFICIAL RECORD BOOK 1445, PAGES 1114 THROUGH 1183, THE PUBLIC RECORDS OF LEE COUNTY, FLORIDA, AND AS AMENDED IN OR BOOK 1455, PAGE 95 AND OR BOOK 1460, PAGE 101, OR BOOK 1520, PAGE 594, OR BOOK 1633, PAGE 2177, OR BOOK 1663, PAGE 2559, OR BOOK 1724, PAGE 1417, OR BOOK 2181, PAGE 3575 AND OR BOOK 2974, PAGE 1862 ALT IN THE PUBLIC RECORDS OF LEE COUNTY, FLORIDA, TOGETHER WITH AN UNDIVIDED INTEREST IN AND TO THE COMMON ELEMENTS AS THE SAME IS ESTABLISHES AND IDENTIFIED IN THE DECLARATION OF CONDOMINIUM AND PLANS ON FILE IN THE OFFICIAL RECORDS OF LEE COUNTY, FLORIDA.

Any person claiming an interest in the surplus from the sale, if any, other than the property owner as of the date of the lis pendens must file a claim before the clerk reports the surplus as unclaimed.

Dated this day of 10/01/2026

Kevin C Karnes
CLERK OF THE CIRCUIT COURT
(SEAL) BY N Wright-Angad
As Deputy Clerk

Van Ness Law Firm, PLC
1239 E. Newport Center Drive
Suite #110
Deerfield Beach, Florida 33442
Phone (954) 571-2031
Pleadings@vanlawfl.com
TF21509-26/sap
October 9, 16, 2026 26-04268L

SECOND INSERTION

NOTICE OF FORECLOSURE SALE
IN THE CIRCUIT COURT OF THE TWENTIETH JUDICIAL CIRCUIT OF FLORIDA IN AND FOR LEE COUNTY
GENERAL JURISDICTION DIVISION
CASE NO. 25-CA-004451
FREEDOM MORTGAGE CORPORATION,
Plaintiff, vs.
GREGORY W PERRY A/K/A GREGORY WAYNE PERRY, et al.,
Defendant.

NOTICE IS HEREBY GIVEN pursuant to a Summary Final Judgment of Foreclosure entered May 7, 2026 in Civil Case No. 25-CA-004451 of the Circuit Court of the TWENTIETH JUDICIAL CIRCUIT in and for Lee County, Ft. Myers, Florida, wherein FREEDOM MORTGAGE CORPORATION is Plaintiff and Gregory W Perry a/k/a Gregory Wayne Perry, et al., are Defendants, the Clerk of Court, Kevin C. Karnes, will sell to the highest and best bidder for cash at www.lee.realforeclose.com in accordance with Chapter 45, Florida Statutes on the 22nd day of October, 2026 at 9:00 AM on the following described property as set forth in said Summary Final Judgment, to-wit:

Foxmoor Lakes, Phase II, Building #29, Unit B, a tract or parcel of land situated in the State of Florida, County of Lee, being a part of Section 36, Township 43 South, Range 24 East, and further bounded and described as follows:

Starting at the Southwest corner of the Southeast 1/4 of said Section 36; thence South 89 degrees 21 minutes 53 seconds East along the Southerly line of said Section 36 for 757.50 feet; thence North 00 degrees 38 minutes 07 seconds East for 1406.85 feet to a point on curve concave to the Southwest having a radius of 350.00 feet and which point a radial line bears North 20 degrees 39 minutes 18 seconds East said curve being the Northeasterly right of way of New Post Road (100.00 feet wide recorded in Official Records Book 1129, Page 1687, of the Public Records of said Lee County); thence North 56 degrees 01 minute 45 seconds East along a non-tangent line to said curve for 662.88 feet; thence South 43 degrees 29 minutes 22 seconds East for 257.84 feet; thence North 46 degrees 30 minutes 38 seconds East for 101.00 feet to the center point of Building No. 29 and the POINT OF BEGINNING of the herein described Unit B; thence North 43 degrees 29 minutes 22 seconds West for 32.83 feet; thence North 46 degrees 30 minutes 38 seconds East for 45.50 feet; thence South 43 degrees 29 minutes 22 seconds East for 32.83 feet; thence South 46 degrees 30 minutes 38 seconds West for 45.50 feet to the POINT OF BEGINNING.

Parcel Number: 36-43-24-24-00029-00B0

Address: 15437 Crystal Lake Dr, Nort Fort Myers, FL 33917

Any person claiming an interest in the surplus from the sale, if any, other than the property owner as of the date of the lis pendens, must file a claim before the clerk reports the surplus as unclaimed.

Dated this day of 10/01/2026

Kevin C. Karnes
Deputy Clerk
CLERK OF THE CIRCUIT COURT
As Clerk of the Court
(SEAL) BY: N Wright-Angad

McCalla Raymer Leibert Pierce, LLP
110 SE 6th Street, Suite 2300
Fort Lauderdale, FL 33301
AccountsPayable@mccalla.com
Counsel of Plaintiff
25-12906FL
October 9, 16, 2026 26-04271L

--- TAX DEEDS / ACTIONS / PUBLIC SALES ---

FOURTH INSERTION

NOTICE OF APPLICATION FOR TAX DEED
Section 197.512 F.S.

Tax Deed #:2026000771

NOTICE IS HEREBY GIVEN that Savvy FL LLC First Horizon Collateral Assignee the holder of the following certificate(s) has filed said certificate(s) for a tax deed to be issued thereon. The certificate number(s), year(s) of issuance, the description of the property and the name(s) in which it was assessed are as follows:

Certificate Number: 24-12002 Year of Issuance 2024 Description of Property LOT 65, OF THE ISLAND CLUB AT CORKSCREW WOODLANDS-PHASE II, ACCORDING TO THE PLAT THEREOF, AS RECORDED IN PLAT BOOK 58, PAGE 14, OF THE PUBLIC RECORDS OF LEE COUNTY, FLORIDA. LOT 65A, THE ISLAND CLUB AT CORKSCREW WOODLANDS-PHASE IX, A SUBDIVISION ACCORDING TO THE PLAT THEREOF AT INSTRUMENT NUMBER 2010000226322, IN PUBLIC RECORDS OF LEE COUNTY, FLORIDA. Strap Number 35-46-25-E4-06000.0650

Names in which assessed:
RAMEY MYERS FAMILY TRUST, THE RAMEY MYERS FAMILY TRUST DATED MAY 2, 2024

All of said property being in the County of Lee, State of Florida. Unless such certificate(s) shall be redeemed according to the law the property described in such certificate(s) will be sold to the highest bidder online at www.lee.realtaxdeed.com on 11/17/2026 at 10:00 am, by Kevin C. Karnes, Lee County Clerk of the Circuit Court & Comptroller.

Sept. 25; Oct. 2, 9, 16, 2026

26-03927L

FOURTH INSERTION

NOTICE OF APPLICATION FOR TAX DEED
Section 197.512 F.S.

Tax Deed #:2026000707

NOTICE IS HEREBY GIVEN that Savvy FL LLC First Horizon Collateral Assignee the holder of the following certificate(s) has filed said certificate(s) for a tax deed to be issued thereon. The certificate number(s), year(s) of issuance, the description of the property and the name(s) in which it was assessed are as follows:

Certificate Number: 24-10923 Year of Issuance 2024 Description of Property LOT 7 LESS ROAD RIGHT-OF-WAY AND ALL OF LOT 20, BLOCK 1, KAUNES W R SUBDIVISION, ACCORDING TO THE PLAT THEREOF, RECORDED IN PLAT BOOK 1, PAGE(S) 60, OF THE PUBLIC RECORDS OF LEE COUNTY, FLORIDA. THE SOUTH 41.07 FEET OF LOT 8 AND ALL OF LOT 18, BLOCK 1, KAUNES W R SUBDIVISION, ACCORDING TO THE PLAT THEREOF, RECORDED IN PLAT BOOK 1, PAGE(S) 60, OF THE PUBLIC RECORDS OF LEE COUNTY, FLORIDA. LOTS 9 AND 19 LESS ROAD RIGHT-OF-WAY, BLOCK 1, KAUNES W R SUBDIVISION, ACCORDING TO THE PLAT THEREOF, RECORDED IN PLAT BOOK 1, PAGE(S) 60, OF THE PUBLIC RECORDS OF LEE COUNTY, FLORIDA. LOTS 5 AND 6 AND 21 AND 22, BLOCK 1, KAUNES W R SUBDIVISION, ACCORDING TO THE PLAT THEREOF, RECORDED IN PLAT BOOK 1, PAGE(S) 60, OF THE PUBLIC RECORDS OF LEE COUNTY, FLORIDA. LESS AND EXCEPT THEREFROM THOSE PORTIONS TAKEN UNDER ORDER OF TAKING RECORDED IN OFFICIAL RECORDS BOOK 4196, PAGE 3244 OF THE PUBLIC RECORDS OF LEE COUNTY, FLORIDA. Strap Number 19-44-25-P2-00801.0050

Names in which assessed:
MOUNT OLIVE A.M.E. CHURCH, MOUNT OLIVE A.M.E. CHURCH INC., MOUNT OLIVE A.M.E. CHURCH, INCORPORATED, Mount Olive African Methodist Episcopal Church of Fort Myers

All of said property being in the County of Lee, State of Florida. Unless such certificate(s) shall be redeemed according to the law the property described in such certificate(s) will be sold to the highest bidder online at www.lee.realtaxdeed.com on 11/17/2026 at 10:00 am, by Kevin C. Karnes, Lee County Clerk of the Circuit Court & Comptroller.

Sept. 25; Oct. 2, 9, 16, 2026

26-03917L

FOURTH INSERTION

NOTICE OF APPLICATION FOR TAX DEED
Section 197.512 F.S.

Tax Deed #:2026000800

NOTICE IS HEREBY GIVEN that GISELA VOLKMEIER the holder of the following certificate(s) has filed said certificate(s) for a tax deed to be issued thereon. The certificate number(s), year(s) of issuance, the description of the property and the name(s) in which it was assessed are as follows:

Certificate Number: 24-00758 Year of Issuance 2024 Description of Property BEGINNING AT THE SOUTHWEST CORNER OF SECTION 24, TOWNSHIP 44 SOUTH, RANGE 22 EAST, THENCE NORTH 1200 FEET TO THE CENTER LINE OF STATE ROAD NO. 183; THENCE NORTH 37° 35' EAST ALONG CENTER LINE OF SAID STATE ROAD 3346.8 FEET; THENCE SOUTH 26° 50' EAST 279.50 FEET TO THE POINT OF BEGINNING OF THE LAND HEREIN DESCRIBED; THENCE CONTINUE SOUTH 26° 50' EAST 100 FEET; THENCE NORTH 63° 35' EAST 207 FEET, MORE OR LESS, TO THE SHORE LINE OF PORPOISE ISLAND; THENCE NORTHERLY ALONG THE SHORE LINE OF SAID ISLAND TO A POINT WHICH IS NORTH 63° 35' EAST OF THE POINT OF BEGINNING; THENCE SOUTH 63° 35' WEST 212 FEET, MORE OR LESS TO THE POINT OF BEGINNING Strap Number 24-44-22-00-00018.0000

Names in which assessed:
W A S HOLDINGS LLC

All of said property being in the County of Lee, State of Florida. Unless such certificate(s) shall be redeemed according to the law the property described in such certificate(s) will be sold to the highest bidder online at www.lee.realtaxdeed.com on 11/17/2026 at 10:00 am, by Kevin C. Karnes, Lee County Clerk of the Circuit Court & Comptroller.

Sept. 25; Oct. 2, 9, 16, 2026

26-03932L

FOURTH INSERTION

NOTICE OF APPLICATION FOR TAX DEED
Section 197.512 F.S.

Tax Deed #:2026000760

NOTICE IS HEREBY GIVEN that Savvy FL LLC First Horizon Collateral Assignee the holder of the following certificate(s) has filed said certificate(s) for a tax deed to be issued thereon. The certificate number(s), year(s) of issuance, the description of the property and the name(s) in which it was assessed are as follows:

Certificate Number: 24-12453 Year of Issuance 2024 Description of Property LOT 18, BLOCK 3, OF IMPERIAL SHORES, AN UNRECORDED SUBDIVISION, SAID LOT BEING MORE PARTICULARLY DESCRIBED AS FOLLOWS: A LOT OR PARCEL OF LAND LYING IN THE SOUTHWEST QUARTER OF THE SOUTHEAST QUARTER OF SECTION 32, TOWNSHIP 47 SOUTH, RANGE 25 EAST, LEE COUNTY, FLORIDA, WHICH LOT OR PARCEL IS DESCRIBED AS FOLLOWS: FROM THE SOUTHWEST CORNER OF SAID QUARTER SECTION RUN NORTH 1° 44' 10" WEST ALONG THE WEST LINE THEREOF FOR 1325.0 FEET; THENCE NORTH 89° 35' 10" EAST PARALLEL TO THE SOUTH LINE OF SECTION 32 FOR 428.29 FEET TO THE POINT OF BEGINNING OF THE LANDS HEREIN DESCRIBED; FROM SAID POINT OF BEGINNING CONTINUE NORTH 89° 35' 10" EAST PARALLEL TO THE SOUTH LINE OF SAID SECTION 32 FOR 60.0 FEET; THENCE RUN SOUTH 0° 02' 10" EAST FOR 125.0 FEET; THENCE RUN SOUTH 89° 35' 10" WEST FOR 60.0 FEET; THENCE RUN NORTH 0° 02' 10" WEST 125.0 FEET TO THE POINT OF BEGINNING. Strap Number 32-47-25-B3-00203.0180

Names in which assessed:
THOMAS NGUYEN

All of said property being in the County of Lee, State of Florida. Unless such certificate(s) shall be redeemed according to the law the property described in such certificate(s) will be sold to the highest bidder online at www.lee.realtaxdeed.com on 11/17/2026 at 10:00 am, by Kevin C. Karnes, Lee County Clerk of the Circuit Court & Comptroller.

Sept. 25; Oct. 2, 9, 16, 2026

26-03919L

FOURTH INSERTION

NOTICE OF APPLICATION FOR TAX DEED
Section 197.512 F.S.

Tax Deed #:2026000762

NOTICE IS HEREBY GIVEN that Savvy FL LLC First Horizon Collateral Assignee the holder of the following certificate(s) has filed said certificate(s) for a tax deed to be issued thereon. The certificate number(s), year(s) of issuance, the description of the property and the name(s) in which it was assessed are as follows:

Certificate Number: 24-09931 Year of Issuance 2024 Description of Property FINEISS RECORDED SUBD DB 270 PG 349 LOT 11 Strap Number 33-43-25-01-00011.0000

Names in which assessed:
FARM 684 LLC

All of said property being in the County of Lee, State of Florida. Unless such certificate(s) shall be redeemed according to the law the property described in such certificate(s) will be sold to the highest bidder online at www.lee.realtaxdeed.com on 11/17/2026 at 10:00 am, by Kevin C. Karnes, Lee County Clerk of the Circuit Court & Comptroller.

Sept. 25; Oct. 2, 9, 16, 2026

26-03916L

FOURTH INSERTION

NOTICE OF APPLICATION FOR TAX DEED
Section 197.512 F.S.

Tax Deed #:2026000776

NOTICE IS HEREBY GIVEN that Savvy FL LLC First Horizon Collateral Assignee the holder of the following certificate(s) has filed said certificate(s) for a tax deed to be issued thereon. The certificate number(s), year(s) of issuance, the description of the property and the name(s) in which it was assessed are as follows:

Certificate Number: 24-06584 Year of Issuance 2024 Description of Property LOT 113, BLOCK C. FOREST PARK, ACCORDING TO THE PLAT THEREOF AS RECORDED IN OFFICIAL RECORDS BOOK 943, PAGES 219 THROUGH 233, INCLUSIVE, OF THE PUBLIC RECORDS OF LEE COUNTY. FLORIDA. TOGETHER WITH THAT CERTAIN 1973 "CNCRD" SINGLE WIDE MOBILE HOME: IDENTIFICATION #: 3344076847 ; TITLE #: 11259847 Strap Number 36-43-24-11-0000C.1130

Names in which assessed:
BRIAN T ELDRIDGE

All of said property being in the County of Lee, State of Florida. Unless such certificate(s) shall be redeemed according to the law the property described in such certificate(s) will be sold to the highest bidder online at www.lee.realtaxdeed.com on 11/17/2026 at 10:00 am, by Kevin C. Karnes, Lee County Clerk of the Circuit Court & Comptroller.

Sept. 25; Oct. 2, 9, 16, 2026

26-03922L

FOURTH INSERTION

NOTICE OF APPLICATION FOR TAX DEED
Section 197.512 F.S.

Tax Deed #:2026000763

NOTICE IS HEREBY GIVEN that Savvy FL LLC First Horizon Collateral Assignee the holder of the following certificate(s) has filed said certificate(s) for a tax deed to be issued thereon. The certificate number(s), year(s) of issuance, the description of the property and the name(s) in which it was assessed are as follows:

Certificate Number: 24-09967 Year of Issuance 2024 Description of Property LEASEHOLD INTEREST IN: UNIT/LOT NO. 260 OF ORANGE HARBOR MOBILE HOME & RV PARK, ACCORDING TO EXHIBIT "B" (THE "PLOT PLAN") OF THE DECLARATION OF MASTER FORM OCCUPANCY AGREEMENT RECORDED AS CLERK'S INSTRUMENT NO. 2012000226491, PUBLIC RECORDS OF LEE COUNTY, FLORIDA (THE "MASTER AGREEMENT"), AND AS LEGALLY DESCRIBED IN EXHIBIT "A" TO SAID MASTER AGREEMENT. Strap Number 34-43-25-09-00000.2600

Names in which assessed:
GEORGE T ADAMS, JANET . L ADAMS, Janet L Adams

All of said property being in the County of Lee, State of Florida. Unless such certificate(s) shall be redeemed according to the law the property described in such certificate(s) will be sold to the highest bidder online at www.lee.realtaxdeed.com on 11/17/2026 at 10:00 am, by Kevin C. Karnes, Lee County Clerk of the Circuit Court & Comptroller.

Sept. 25; Oct. 2, 9, 16, 2026

26-03924L

SECOND INSERTION

Notice of Self Storage Sale

Please take notice Prime Storage - North Fort Myers Hancock located at 4150 Hancock Bridge Pkwy #39 North Fort Myers FL 33903 intends to hold a sale to sell the property stored at the Facility by the below Occupant who is in default at an Auction. The sale will occur as an online auction via www.storagetreasures.com on 10/27/2026 at 12:00 PM. Unless stated otherwise the description of the contents are household goods, furnishings and garage essentials. Rachel Wilson. This sale may be withdrawn at any time without notice. Certain terms and conditions apply. See manager for details.

October 9, 16, 2026 26-04244L

FOURTH INSERTION

NOTICE OF APPLICATION FOR TAX DEED
Section 197.512 F.S.

Tax Deed #:2026000769

NOTICE IS HEREBY GIVEN that Savvy FL LLC First Horizon Collateral Assignee the holder of the following certificate(s) has filed said certificate(s) for a tax deed to be issued thereon. The certificate number(s), year(s) of issuance, the description of the property and the name(s) in which it was assessed are as follows:

Certificate Number: 24-12000 Year of Issuance 2024 Description of Property LOT NO. 34, BLOCK "H", CORKSCREW WOODLANDS - PHASE ONE, A SUBDIVISION ACCORDING TO THE PLAT THEREOF, RECORDED IN PLAT BOOK 34, PAGES 130-139, OF THE PUBLIC RECORDS OF LEE COUNTY, FLORIDA. INCLUDING THAT CERTAIN 1988 MOBILE HOME VIN: CE-10CFL0810870665 AND TITLE NO. 45631974. Strap Number 35-46-25-E4-0100H.0340

Names in which assessed:
AMY L ROBINSON TRUST, THE AMY L. ROBINSON REVOCABLE TRUST DATED DECEMBER 19, 2017

All of said property being in the County of Lee, State of Florida. Unless such certificate(s) shall be redeemed according to the law the property described in such certificate(s) will be sold to the highest bidder online at www.lee.realtaxdeed.com on 11/17/2026 at 10:00 am, by Kevin C. Karnes, Lee County Clerk of the Circuit Court & Comptroller.

Sept. 25; Oct. 2, 9, 16, 2026

26-03925L

FOURTH INSERTION

NOTICE OF APPLICATION FOR TAX DEED
Section 197.512 F.S.

Tax Deed #:2026000767

NOTICE IS HEREBY GIVEN that Savvy FL LLC First Horizon Collateral Assignee the holder of the following certificate(s) has filed said certificate(s) for a tax deed to be issued thereon. The certificate number(s), year(s) of issuance, the description of the property and the name(s) in which it was assessed are as follows:

Certificate Number: 24-21206 Year of Issuance 2024 Description of Property UNIT 305, BUILDING C, THE FAIRWAYS CONDOMINIUM OF LEHIGH ACRES, FLORIDA, INC. PHASE THREE, A CONDOMINIUM, ALL AS SET FORTH IN THE DECLARATION OF CONDOMINIUM AND THE EXHIBITS ATTACHED THERETO AND FORMING A PART THEREOF, AS RECORDED IN OFFICIAL RECORDS BOOK 943, PAGE 576, AND ALL AMENDMENTS THERETO, OF THE PUBLIC RECORDS OF LEE COUNTY, FLORIDA. THE ABOVE DESCRIPTION INCLUDES, BUT IS NOT LIMITED TO, ALL APPURTENANCES TO THE CONDOMINIUM UNIT ABOVE DESCRIBED, INCLUDING THE UNDIVIDED INTEREST IN THE COMMON ELEMENTS OF SAID CONDOMINIUM. Strap Number 34-44-27-30-0000C.3050

Names in which assessed:
GEORGE BONFE

All of said property being in the County of Lee, State of Florida. Unless such certificate(s) shall be redeemed according to the law the property described in such certificate(s) will be sold to the highest bidder online at www.lee.realtaxdeed.com on 11/17/2026 at 10:00 am, by Kevin C. Karnes, Lee County Clerk of the Circuit Court & Comptroller.

Sept. 25; Oct. 2, 9, 16, 2026

26-03929L

SECOND INSERTION

Notice of Self Storage Sale

Please take notice Prime Storage - North Fort Myers located at 2590 N. Tamiami Trail North Fort Myers FL 33903 intends to hold a sale to sell the property stored at the Facility by the below list of Occupants who are in default at an Auction. The sale will occur as an online auction via www.storagetreasures.com on 10/27/2026 at 12:00 PM. Unless stated otherwise the description of the contents are household goods, furnishings and garage essentials. Anna Salorino; Makini Wilkerson. This sale may be withdrawn at any time without notice. Certain terms and conditions apply. See manager for details.

October 9, 16, 2026 26-04243L

FOURTH INSERTION

NOTICE OF APPLICATION FOR TAX DEED
Section 197.512 F.S.

Tax Deed #:2026000783

NOTICE IS HEREBY GIVEN that TLOA OF FLORIDA LLC FOR SECURED PARTY the holder of the following certificate(s) has filed said certificate(s) for a tax deed to be issued thereon. The certificate number(s), year(s) of issuance, the description of the property and the name(s) in which it was assessed are as follows:

Certificate Number: 24-17343 Year of Issuance 2024 Description of Property A TRACT OR PARCEL OF LAND IN THE NORTHWEST QUARTER (NW1/4) OF THE NORTHEAST QUARTER (NE 1/4) OF SECTION 15, TOWNSHIP 43 SOUTH, RANGE 27 EAST, LEE COUNTY, FLORIDA. COMMENCING AT THE NORTHEAST (NE) CORNER OF SAID SECTION 15, THENCE S. 89 DEGREES 34' 45" WEST (W). (BASIS FOR BEARING IS ASSUMED) ALONG THE NORTH (N) LINE OF SAID SECTION 15 DISTANCE 1501.18 FEET TO THE POINT OF BEGINNING, THENCE SOUTH (S) 00 DEGREES 08' 00" WEST (W) ALONG THE FRACTIONAL SECTION LINE DISTANCE 436 FEET THENCE SOUTH (S) 89 DEGREES 37' 03" WEST (W) ALONG SAID SOUTH (S) LINE DISTANCE 536.45 FEET THENCE NORTH (N) 00 DEGREES 08' 00" EAST (E) DISTANCE 436 FEET THENCE NORTH (N) 89 DEGREES 37' 03" EAST (E) 536.45 FEET TO THE POINT OF BEGINNING Strap Number 15-43-27-00-00003.0070

Names in which assessed:
DAVID L PARSONS

All of said property being in the County of Lee, State of Florida. Unless such certificate(s) shall be redeemed according to the law the property described in such certificate(s) will be sold to the highest bidder online at www.lee.realtaxdeed.com on 11/17/2026 at 10:00 am, by Kevin C. Karnes, Lee County Clerk of the Circuit Court & Comptroller.

Sept. 25; Oct. 2, 9, 16, 2026

26-03939L

FOURTH INSERTION

NOTICE OF APPLICATION FOR TAX DEED
Section 197.512 F.S.

Tax Deed #:2026000710

NOTICE IS HEREBY GIVEN that Savvy FL LLC First Horizon Collateral Assignee the holder of the following certificate(s) has filed said certificate(s) for a tax deed to be issued thereon. The certificate number(s), year(s) of issuance, the description of the property and the name(s) in which it was assessed are as follows:

Certificate Number: 24-09805 Year of Issuance 2024 Description of Property A TRACT OR PARCEL OF LAND LYING IN THE NORTHEAST 1/4 OF THE NORTHEAST 1/4 OF SECTION 20, TOWNSHIP 43 SOUTH, RANGE 25 EAST, LEE COUNTY, FLORIDA. COMMENCING AT THE NORTHEAST CORNER OF SAID FRACTION OF A SECTION, THENCE RUN SOUTH 89'35'04.02" WEST ALONG THE NORTH LINE OF SAID FRACTION OF A SECTION FOR 39.745 FEET TO ITS INTERSECTION WITH THE WEST RIGHT-OF- WAY LINE OF LEETANA DR. (50' FROM CENTERLINE), THENCE RUN ALONG A CURVE TO THE LEFT HAVING FOR ITS ELEMENTS R=371.00' DELTA=03'48'35" A= 24.669' CH= 24.664' C.B .= S. 15'53'37.33" EAST FOR 24.669 FEET TO THE WEST RIGHT-OF-WAY LINE OF WETSTONE RD. (33.00 FEET FROM CENTERLINE AND THE EAST LINE OF SECTION 20), THENCE RUN SOUTH 00'01'11.23" EAST ALONG SAID RIGHT-OF-WAY LINE FOR 681.305 FEET TO THE POINT OF BEGINNING OF THE FOLLOWING DESCRIBED PARCEL: FROM SAID POINT OF BEGINNING RUN NORTH 80 DEGREES 11'55" WEST FOR 999.94' TO THE NORTH RIGHT OF WAY LINE OF 1-75. THENCE RUN ALONG SAID RIGHT OF WAY LINE BEING A CURVE TO THE LEFT HAVING FOR ITS ELEMENTS R=11,341.156' DELTA= 05 DEGREES 18'17", ARC= 1050.020', CHORD= 1049.644', C.B .= S.69 DEGREES 51'19.5" EAST FOR 1049:644' TO THE WEST RIGHT OF WAY LINE OF WETSTONE RD. THENCE RUN NORTH 00 DEGREES 01'11.23" WEST FOR 191.275' TO THE POINT OF BEGINNING Strap Number 20-43-25-00-00003.002D

Names in which assessed:
DIANNE LEDGER, ROBERT GENE LEDGER

All of said property being in the County of Lee, State of Florida. Unless such certificate(s) shall be redeemed according to the law the property described in such certificate(s) will be sold to the highest bidder online at www.lee.realtaxdeed.com on 11/17/2026 at 10:00 am, by Kevin C. Karnes, Lee County Clerk of the Circuit Court & Comptroller.

Sept. 25; Oct. 2, 9, 16, 2026

26-03915L

THIRD INSERTION

NOTICE OF ACTION
IN THE CIRCUIT COURT OF THE TWENTIETH JUDICIAL CIRCUIT IN AND FOR LEE COUNTY, FLORIDA.
CASE NO.: 26-CA-004129
NAJMI REALTY, LLC,
A Florida limited liability company,
Plaintiff, vs.
CLAUDIA ROMERO,
Defendant.

TO: Claudia Romero

YOUR ARE NOTIFIED that an action has been filed against you in the Lee County Court of the Twentieth Judicial Circuit, in and for Lee County, Florida, for Specific Performance of a real estate contract, and you are required to serve a copy of your written defenses to it, if any, to: Christine F. Wright, Esq., 923 Del Prado Blvd., Suite 205, Cape Coral, FL 33990, on or before November 9, 2026, and file the original with the Clerk of this Court, at the Lee County Justice Center, 1700 Monroe Street, Fort Myers, Florida, 33901, either before service on Plaintiff's attorney or immediately thereafter; or a default will be entered against you for the relief demanded in the Complaint.

THIS NOTICE will be published once each week for four consecutive weeks in a newspaper of general circulation published in Lee County, Florida.

Dated this 28th day of September, 2026.

Kevin C. Karnes
Clerk of Court
(SEAL) By K Harris
Deputy Clerk

Christine F. Wright, Esq.,
923 Del Prado Blvd., Suite 205,
Cape Coral, FL 33990
October 2, 9, 16, 23, 2026

26-04087L

THIRD INSERTION

NOTICE OF ACTION
IN THE CIRCUIT COURT OF THE TWENTIETH JUDICIAL CIRCUIT IN AND FOR LEE COUNTY, FLORIDA.
CASE NO.: 2026-CA-004409
NAJMI REALTY, LLC,
A Florida limited liability company,
Plaintiff, vs.
LUBOMIR HUGO BREJCHA,
Defendant.

TO: Lubomir Hugo Brejcha

YOUR ARE NOTIFIED that an action has been filed against you in the Lee County Court of the Twentieth Judicial Circuit, in and for Lee County, Florida, for Specific Performance of a real estate contract, and you are required to serve a copy of your written defenses to it, if any, to: Christine F. Wright, Esq., 923 Del Prado Blvd., Suite 205, Cape Coral, FL 33990, on or before November 9, 2026, and file the original with the Clerk of this Court, at the Lee County Justice Center, 1700 Monroe Street, Fort Myers, Florida, 33901, either before service on Plaintiff's attorney or immediately thereafter; or a default will be entered against you for the relief demanded in the Complaint.

THIS NOTICE will be published once each week for four consecutive weeks in a newspaper of general circulation published in Lee County, Florida.

Dated this 28th day of September, 2026.

Kevin C. Karnes
Clerk of Court
(SEAL) By K Harris
Deputy Clerk

Christine F. Wright, Esq.,
923 Del Prado Blvd., Suite 205,
Cape Coral, FL 33990
October 2, 9, 16, 23, 2026

26-04085L

--- TAX DEEDS ---

FOURTH INSERTION

NOTICE OF APPLICATION FOR TAX DEED
Section 197.512 F.S.

Tax Deed #:2026000757

NOTICE IS HEREBY GIVEN that Savvy FL LLC First Horizon Collateral Assignee the holder of the following certificate(s) has filed said certificate(s) for a tax deed to be issued thereon. The certificate number(s), year(s) of issuance, the description of the property and the name(s) in which it was assessed are as follows:

Certificate Number: 24-12438 Year of Issuance 2024 Description of Property UNIT 908, THE BEACH AND TENNIS CLUB CONDOMINIUM V, ACCORDING TO THE TERMS AND CONDITIONS OF THE DECLARATION OF CONDOMINIUM AS RECORDED IN OFFICIAL RECORDS BOOK 1471, PAGE 1535, PUBLIC RECORDS OF LEE COUNTY, FLORIDA. Strap Number 31-47-25-B3-01400.0908

Names in which assessed: ROGER RABA

All of said property being in the County of Lee, State of Florida. Unless such certificate(s) shall be redeemed according to the law the property described in such certificate(s) will be sold to the highest bidder online at www.lee.realtaxdeed.com on 11/17/2026 at 10:00 am, by Kevin C. Karnes, Lee County Clerk of the Circuit Court & Comptroller.

Sept. 25; Oct. 2, 9, 16, 2026

26-03918L

FOURTH INSERTION

NOTICE OF APPLICATION FOR TAX DEED
Section 197.512 F.S.

Tax Deed #:2026000759

NOTICE IS HEREBY GIVEN that Savvy FL LLC First Horizon Collateral Assignee the holder of the following certificate(s) has filed said certificate(s) for a tax deed to be issued thereon. The certificate number(s), year(s) of issuance, the description of the property and the name(s) in which it was assessed are as follows:

Certificate Number: 24-07856 Year of Issuance 2024 Description of Property LOTS 17, 18 AND 19, BLOCK 1205, UNIT 19, CAPE CORAL SUBDIVISION, ACCORDING TO THE MAP OR PLAT THEREOF, AS RECORDED IN PLAT BOOK 13, PAGES 121 THROUGH 135, INCLUSIVE, IN THE PUBLIC RECORDS OF LEE COUNTY, FLORIDA Strap Number 32-44-24-C1-01205.0170

Names in which assessed: SARAH CARPENTER, SHAWN CARPENTER

All of said property being in the County of Lee, State of Florida. Unless such certificate(s) shall be redeemed according to the law the property described in such certificate(s) will be sold to the highest bidder online at www.lee.realtaxdeed.com on 11/17/2026 at 10:00 am, by Kevin C. Karnes, Lee County Clerk of the Circuit Court & Comptroller.

Sept. 25; Oct. 2, 9, 16, 2026

26-03914L

FOURTH INSERTION

NOTICE OF APPLICATION FOR TAX DEED
Section 197.512 F.S.

Tax Deed #:2026000756

NOTICE IS HEREBY GIVEN that Savvy FL LLC First Horizon Collateral Assignee the holder of the following certificate(s) has filed said certificate(s) for a tax deed to be issued thereon. The certificate number(s), year(s) of issuance, the description of the property and the name(s) in which it was assessed are as follows:

Certificate Number: 24-06295 Year of Issuance 2024 Description of Property LOTS 39 AND 40, BLOCK 2144, CAPE CORAL UNIT 32, ACCORDING TO THE PLAT THEREOF, AS RECORDED IN PLAT BOOK 16, PAGES 1 THROUGH 13, INCLUSIVE, OF THE PUBLIC RECORDS OF LEE COUNTY, FLORIDA. Strap Number 31-43-24-C4-02144.0390

Names in which assessed: SARAI MAYELA ROSILLO SAYAGO

All of said property being in the County of Lee, State of Florida. Unless such certificate(s) shall be redeemed according to the law the property described in such certificate(s) will be sold to the highest bidder online at www.lee.realtaxdeed.com on 11/17/2026 at 10:00 am, by Kevin C. Karnes, Lee County Clerk of the Circuit Court & Comptroller.

Sept. 25; Oct. 2, 9, 16, 2026

26-03913L

FOURTH INSERTION

NOTICE OF APPLICATION FOR TAX DEED
Section 197.512 F.S.

Tax Deed #:2026000780

NOTICE IS HEREBY GIVEN that Savvy FL LLC First Horizon Collateral Assignee the holder of the following certificate(s) has filed said certificate(s) for a tax deed to be issued thereon. The certificate number(s), year(s) of issuance, the description of the property and the name(s) in which it was assessed are as follows:

Certificate Number: 24-06524 Year of Issuance 2024 Description of Property LOTS 4 AND 16, IN BLOCK 30 OF PALMONA PARK UNIT 1, A SUBDIVISION ACCORDING TO THE MAP OR PLAT THEREOF ON FILE AND RECORDED IN THE OFFICE OF THE CLERK OF THE CIRCUIT COURT OF LEE COUNTY, FLORIDA, IN PLAT BOOK 7, PAGES 54 AND 55. Strap Number 34-43-24-L3-00030.0040

Names in which assessed: DENNIS LEE MARSHALL

All of said property being in the County of Lee, State of Florida. Unless such certificate(s) shall be redeemed according to the law the property described in such certificate(s) will be sold to the highest bidder online at www.lee.realtaxdeed.com on 11/17/2026 at 10:00 am, by Kevin C. Karnes, Lee County Clerk of the Circuit Court & Comptroller.

Sept. 25; Oct. 2, 9, 16, 2026

26-03921L

FOURTH INSERTION

NOTICE OF APPLICATION FOR TAX DEED
Section 197.512 F.S.

Tax Deed #:2026000778

NOTICE IS HEREBY GIVEN that Savvy FL LLC First Horizon Collateral Assignee the holder of the following certificate(s) has filed said certificate(s) for a tax deed to be issued thereon. The certificate number(s), year(s) of issuance, the description of the property and the name(s) in which it was assessed are as follows:

Certificate Number: 24-04945 Year of Issuance 2024 Description of Property LOTS 3 AND 4, BLOCK B, IONA GARDENS, A SUBDIVISION AS PER PLAT THEREOF RECORDED IN PLAT BOOK 17, PAGE 72 OF THE PUBLIC RECORDS OF LEE COUNTY, FLORIDA. Strap Number 36-45-23-03-0000B.0030

Names in which assessed: STEVEN C MILLER, STEVEN C. MILLER

All of said property being in the County of Lee, State of Florida. Unless such certificate(s) shall be redeemed according to the law the property described in such certificate(s) will be sold to the highest bidder online at www.lee.realtaxdeed.com on 11/17/2026 at 10:00 am, by Kevin C. Karnes, Lee County Clerk of the Circuit Court & Comptroller.

Sept. 25; Oct. 2, 9, 16, 2026

26-03920L

FOURTH INSERTION

NOTICE OF APPLICATION FOR TAX DEED
Section 197.512 F.S.

Tax Deed #:2026000786

NOTICE IS HEREBY GIVEN that Kwok C Cheung the holder of the following certificate(s) has filed said certificate(s) for a tax deed to be issued thereon. The certificate number(s), year(s) of issuance, the description of the property and the name(s) in which it was assessed are as follows:

Certificate Number: 19-025643 Year of Issuance 2019 Description of Property LOT 30, BLOCK 4279, UNIT 61, CAPE CORAL SUBDIVISION, ACCORDING TO THE PLAT THEREOF AS RECORDED IN PLAT BOOK 21, PAGES 4 TO 20, INCLUSIVE, IN THE PUBLIC RECORDS OF LEE COUNTY, FLORIDA. Strap Number 31-43-23-C3-04279.0300

Names in which assessed: ESTATE OF RAYMOND L CIARCIA, RAYMOND L. CIARCIA

All of said property being in the County of Lee, State of Florida. Unless such certificate(s) shall be redeemed according to the law the property described in such certificate(s) will be sold to the highest bidder online at www.lee.realtaxdeed.com on 11/17/2026 at 10:00 am, by Kevin C. Karnes, Lee County Clerk of the Circuit Court & Comptroller.

Sept. 25; Oct. 2, 9, 16, 2026

26-03930L

FOURTH INSERTION

NOTICE OF APPLICATION FOR TAX DEED
Section 197.512 F.S.

Tax Deed #:2026000770

NOTICE IS HEREBY GIVEN that Savvy FL LLC First Horizon Collateral Assignee the holder of the following certificate(s) has filed said certificate(s) for a tax deed to be issued thereon. The certificate number(s), year(s) of issuance, the description of the property and the name(s) in which it was assessed are as follows:

Certificate Number: 24-12001 Year of Issuance 2024 Description of Property LOT NO. 37, BLOCK NO. "P" CORKSCREW WOODLANDS, PHASE THREE, SECTION A, A SUBDIVISION ACCORDING TO THE PLAT THEREOF, RECORDED IN PLAT BOOK 36, PAGES 87 THROUGH 91, INCLUSIVE, OF THE PUBLIC RECORDS OF LEE COUNTY, FLORIDA. Strap Number 35-46-25-E4-050P0.0370

Names in which assessed: MARYANN LEES MAZIK

All of said property being in the County of Lee, State of Florida. Unless such certificate(s) shall be redeemed according to the law the property described in such certificate(s) will be sold to the highest bidder online at www.lee.realtaxdeed.com on 11/17/2026 at 10:00 am, by Kevin C. Karnes, Lee County Clerk of the Circuit Court & Comptroller.

Sept. 25; Oct. 2, 9, 16, 2026

26-03926L

FOURTH INSERTION

NOTICE OF APPLICATION FOR TAX DEED
Section 197.512 F.S.

Tax Deed #:2026000785

NOTICE IS HEREBY GIVEN that Kwok C Cheung the holder of the following certificate(s) has filed said certificate(s) for a tax deed to be issued thereon. The certificate number(s), year(s) of issuance, the description of the property and the name(s) in which it was assessed are as follows:

Certificate Number: 19-026147 Year of Issuance 2019 Description of Property LOTS 3 AND 4, BLOCK 2942A, UNIT 42, CAPE CORAL SUBDIVISION, ACCORDING TO THE PLAT THEREOF RECORDED IN PLAT BOOK 17, PAGES 32 TO 44, INCLUSIVE, IN PUBLIC RECORDS OF LEE COUNTY, FLORIDA. Strap Number 34-43-23-C4-02942.A030

Names in which assessed: TARPON IV, LLC

All of said property being in the County of Lee, State of Florida. Unless such certificate(s) shall be redeemed according to the law the property described in such certificate(s) will be sold to the highest bidder online at www.lee.realtaxdeed.com on 11/17/2026 at 10:00 am, by Kevin C. Karnes, Lee County Clerk of the Circuit Court & Comptroller.

Sept. 25; Oct. 2, 9, 16, 2026

26-03931L

FOURTH INSERTION

NOTICE OF APPLICATION FOR TAX DEED
Section 197.512 F.S.

Tax Deed #:2026000798

NOTICE IS HEREBY GIVEN that Kivi LLC Ocean Bank the holder of the following certificate(s) has filed said certificate(s) for a tax deed to be issued thereon. The certificate number(s), year(s) of issuance, the description of the property and the name(s) in which it was assessed are as follows:

Certificate Number: 24-02241 Year of Issuance 2024 Description of Property LOTS 54 THROUGH 57, BLOCK 2712, CAPE CORAL SUBDIVISION, UNIT NO. 39, ACCORDING TO THE PLAT THEREOF AS RECORDED IN PLAT BOOK 16, PAGES 142 THROUGH 154, INCLUSIVE, OF THE PUBLIC RECORDS OF LEE COUNTY, FLORIDA. Strap Number 35-43-23-C4-02712.0540

Names in which assessed: ASHLEY P SIMON, JOSHUA S. SIMON

All of said property being in the County of Lee, State of Florida. Unless such certificate(s) shall be redeemed according to the law the property described in such certificate(s) will be sold to the highest bidder online at www.lee.realtaxdeed.com on 11/17/2026 at 10:00 am, by Kevin C. Karnes, Lee County Clerk of the Circuit Court & Comptroller.

Sept. 25; Oct. 2, 9, 16, 2026

26-03933L

FOURTH INSERTION

NOTICE OF APPLICATION FOR TAX DEED
Section 197.512 F.S.

Tax Deed #:2026000567

NOTICE IS HEREBY GIVEN that KEYS FUNDING LLC - 2024 the holder of the following certificate(s) has filed said certificate(s) for a tax deed to be issued thereon. The certificate number(s), year(s) of issuance, the description of the property and the name(s) in which it was assessed are as follows:

Certificate Number: 24-14496 Year of Issuance 2024 Description of Property LOT 19, IN BLOCK 15, UNIT 2, SECTION 24, TOWNSHIP 44 SOUTH, RANGE 26 EAST, LEHIGH ACRES, ACCORDING TO THE PLAT THEREOF, AS RECORDED IN PLAT BOOK 15, AT PAGE 68, OF THE PUBLIC RECORD OF LEE COUNTY, FLORIDA. Strap Number 24-44-26-02-00015.0190

Names in which assessed: LAWFORD WHYTE, MAXINE ANNMARIE WHYTE

All of said property being in the County of Lee, State of Florida. Unless such certificate(s) shall be redeemed according to the law the property described in such certificate(s) will be sold to the highest bidder online at www.lee.realtaxdeed.com on 11/17/2026 at 10:00 am, by Kevin C. Karnes, Lee County Clerk of the Circuit Court & Comptroller.

Sept. 25; Oct. 2, 9, 16, 2026

26-03940L

FOURTH INSERTION

NOTICE OF APPLICATION FOR TAX DEED
Section 197.512 F.S.

Tax Deed #:2026000797

NOTICE IS HEREBY GIVEN that Kivi LLC Ocean Bank the holder of the following certificate(s) has filed said certificate(s) for a tax deed to be issued thereon. The certificate number(s), year(s) of issuance, the description of the property and the name(s) in which it was assessed are as follows:

Certificate Number: 24-09031 Year of Issuance 2024 Description of Property LOT 59, LAGUNA LAKES, ACCORDING TO THE PLAT THEREOF, AS RECORDED IN PLAT BOOK 74, PAGES 1 TO 8, INCLUSIVE, OF THE PUBLIC RECORDS OF LEE COUNTY, FLORIDA. Strap Number 33-45-24-15-00000.0590

Names in which assessed: ADDY D. PALMER, MIACHAEL S HUFF

All of said property being in the County of Lee, State of Florida. Unless such certificate(s) shall be redeemed according to the law the property described in such certificate(s) will be sold to the highest bidder online at www.lee.realtaxdeed.com on 11/17/2026 at 10:00 am, by Kevin C. Karnes, Lee County Clerk of the Circuit Court & Comptroller.

Sept. 25; Oct. 2, 9, 16, 2026

26-03937L

FOURTH INSERTION

NOTICE OF APPLICATION FOR TAX DEED
Section 197.512 F.S.

Tax Deed #:2026000788

NOTICE IS HEREBY GIVEN that Kivi LLC Ocean Bank the holder of the following certificate(s) has filed said certificate(s) for a tax deed to be issued thereon. The certificate number(s), year(s) of issuance, the description of the property and the name(s) in which it was assessed are as follows:

Certificate Number: 24-06380 Year of Issuance 2024 Description of Property LOTS 30, 31 AND 32, BLOCK 2230, UNIT 33, CAPE CORAL SUBDIVISION, ACCORDING TO THE PLAT THEREOF RECORDED IN PLAT BOOK 16, PAGES 40 THROUGH 61, INCLUSIVE, IN THE PUBLIC RECORDS OF LEE COUNTY, FLORIDA. Strap Number 32-43-24-C3-02230.0300

Names in which assessed: HUU KHOI NGUYEN, THI KIM CUC LE

All of said property being in the County of Lee, State of Florida. Unless such certificate(s) shall be redeemed according to the law the property described in such certificate(s) will be sold to the highest bidder online at www.lee.realtaxdeed.com on 11/17/2026 at 10:00 am, by Kevin C. Karnes, Lee County Clerk of the Circuit Court & Comptroller.

Sept. 25; Oct. 2, 9, 16, 2026

26-03935L

FOURTH INSERTION

NOTICE OF APPLICATION FOR TAX DEED
Section 197.512 F.S.

Tax Deed #:2026000777

NOTICE IS HEREBY GIVEN that Savvy FL LLC First Horizon Collateral Assignee the holder of the following certificate(s) has filed said certificate(s) for a tax deed to be issued thereon. The certificate number(s), year(s) of issuance, the description of the property and the name(s) in which it was assessed are as follows:

Certificate Number: 24-07981 Year of Issuance 2024 Description of Property SUITE 300A OF LANDMARK PROFESSIONAL CONDOMINIUM, A CONDOMINIUM, ACCORDING TO THE DECLARATION OF CONDOMINIUM RECORDED IN O.R. BOOK 1086, PAGE 717, AND AMENDMENT 2019000064338, ALL EXHIBITS AND AMENDMENTS THEREOF, PUBLIC RECORDS OF LEE COUNTY, FLORIDA. Strap Number 36-44-24-P2-00300.3000

Names in which assessed: Ultra Magnus Enterprises LLC, ULTRA MAGNUS ENTERPRISES, LLC

All of said property being in the County of Lee, State of Florida. Unless such certificate(s) shall be redeemed according to the law the property described in such certificate(s) will be sold to the highest bidder online at www.lee.realtaxdeed.com on 11/17/2026 at 10:00 am, by Kevin C. Karnes, Lee County Clerk of the Circuit Court & Comptroller.

Sept. 25; Oct. 2, 9, 16, 2026

26-03923L

FOURTH INSERTION

NOTICE OF APPLICATION FOR TAX DEED
Section 197.512 F.S.

Tax Deed #:2026000721

NOTICE IS HEREBY GIVEN that Savvy FL LLC First Horizon Collateral Assignee the holder of the following certificate(s) has filed said certificate(s) for a tax deed to be issued thereon. The certificate number(s), year(s) of issuance, the description of the property and the name(s) in which it was assessed are as follows:

Certificate Number: 24-05831 Year of Issuance 2024 Description of Property THE WEST 110 FEET OF THE EAST 220 FEET OF THE SOUTH 247.5 FEET OF LOT 6, BLOCK 23, SUNCOAST ESTATES, UNRECORDED, ACCORDING TO PLAT THEREOF AS RECORDED IN PLAT BOOK 32, PAGE 526, OF THE PUBLIC RECORDS OF LEE COUNTY, FLORIDA. Strap Number 24-43-24-03-00023.006C

Names in which assessed: DANIEL LALLAVE

All of said property being in the County of Lee, State of Florida. Unless such certificate(s) shall be redeemed according to the law the property described in such certificate(s) will be sold to the highest bidder online at www.lee.realtaxdeed.com on 11/17/2026 at 10:00 am, by Kevin C. Karnes, Lee County Clerk of the Circuit Court & Comptroller.

Sept. 25; Oct. 2, 9, 16, 2026

26-03912L

FOURTH INSERTION

NOTICE OF APPLICATION FOR TAX DEED
Section 197.512 F.S.

Tax Deed #:2026000789

NOTICE IS HEREBY GIVEN that Kivi LLC Ocean Bank the holder of the following certificate(s) has filed said certificate(s) for a tax deed to be issued thereon. The certificate number(s), year(s) of issuance, the description of the property and the name(s) in which it was assessed are as follows:

Certificate Number: 24-05157 Year of Issuance 2024 Description of Property LOT 1, OF THAT CERTAIN SUBDIVISION KNOWN AS THIRD ADDITION TO SHELL HARBOR, ACCORDING TO THE MAP OR PLAT THEREOF ON FILE AND RECORDED IN THE OFFICE OF THE CLERK OF THE CIRCUIT COURT OF LEE COUNTY, FLORIDA, IN PLAT BOOK 25, AT PAGE 82. Strap Number 20-46-23-T1-00100.0010

Names in which assessed: 928 LIMPET LLC, 928 LIMPET, LLC

All of said property being in the County of Lee, State of Florida. Unless such certificate(s) shall be redeemed according to the law the property described in such certificate(s) will be sold to the highest bidder online at www.lee.realtaxdeed.com on 11/17/2026 at 10:00 am, by Kevin C. Karnes, Lee County Clerk of the Circuit Court & Comptroller.

Sept. 25; Oct. 2, 9, 16, 2026

26-03934L

FOURTH INSERTION

NOTICE OF APPLICATION FOR TAX DEED
Section 197.512 F.S.

Tax Deed #:2026000782

NOTICE IS HEREBY GIVEN that Savvy FL LLC First Horizon Collateral Assignee the holder of the following certificate(s) has filed said certificate(s) for a tax deed to be issued thereon. The certificate number(s), year(s) of issuance, the description of the property and the name(s) in which it was assessed are as follows:

Certificate Number: 24-20989 Year of Issuance 2024 Description of Property LOT 6, BLOCK 6, UNIT 2, SECTION 29, TOWNSHIP 44 SOUTH, RANGE 27 EAST, LEHIGH ACRES, ACCORDING TO THE MAP OR PLAT THEREOF ON FILE IN THE OFFICE OF THE CLERK OF THE CIRCUIT COURT, RECORDED IN PLAT BOOK 15, PAGE 44, OF THE PUBLIC RECORDS OF LEE COUNTY, FLORIDA. Strap Number 29-44-27-L4-00006.0060

Names in which assessed: JOEL FERRER CARDENAS, JOEL FERRER-CARDENAS, MILDREY FERRER CARDENAS, MILDREY FERRER-CARDENAS

All of said property being in the County of Lee, State of Florida. Unless such certificate(s) shall be redeemed according to the law the property described in such certificate(s) will be sold to the highest bidder online at www.lee.realtaxdeed.com on 11/17/2026 at 10:00 am, by Kevin C. Karnes, Lee County Clerk of the Circuit Court & Comptroller.

Sept. 25; Oct. 2, 9, 16, 2026

26-03928L

FOURTH INSERTION

NOTICE OF APPLICATION FOR TAX DEED
Section 197.512 F.S.

Tax Deed #:2026000791

NOTICE IS HEREBY GIVEN that Kivi LLC Ocean Bank the holder of the following certificate(s) has filed said certificate(s) for a tax deed to be issued thereon. The certificate number(s), year(s) of issuance, the description of the property and the name(s) in which it was assessed are as follows:

Certificate Number: 24-11204 Year of Issuance 2024 Description of Property LOT 34, COLONIAL COUNTRY CLUB PARCEL 117, ACCORDING TO THE MAP OR PLAT THEREOF, AS RECORDED IN PLAT BOOK 72, PAGES 74 AND 75 OF THE PUBLIC RECORDS OF LEE COUNTY, FLORIDA. Strap Number 34-44-25-P3-00200.0340

Names in which assessed: JOHN S CLARK, MARIA B. CLARK

All of said property being in the County of Lee, State of Florida. Unless such certificate(s) shall be redeemed according to the law the property described in such certificate(s) will be sold to the highest bidder online at www.lee.realtaxdeed.com on 11/17/2026 at 10:00 am, by Kevin C. Karnes, Lee County Clerk of the Circuit Court & Comptroller.

Sept. 25; Oct. 2, 9, 16, 2026

26-03938L

FOURTH INSERTION

NOTICE OF APPLICATION FOR TAX DEED
Section 197.512 F.S.

Tax Deed #:2026000790

NOTICE IS HEREBY GIVEN that Kivi LLC Ocean Bank the holder of the following certificate(s) has filed said certificate(s) for a tax deed to be issued thereon. The certificate number(s), year(s) of issuance, the description of the property and the name(s) in which it was assessed are as follows:

Certificate Number: 24-08038 Year of Issuance 2024 Description of Property THE EAST 53 FEET OF LOT 14 AND THE WEST 29 FEET OF LOT 15 OF THAT CERTAIN SUBDIVISION KNOWN AS BOWLING GREEN UNIT TWO, ACCORDING TO THE MAP OR PLAT THEREOF AS RECORDED IN PLAT BOOK 21, PAGE 1 OF THE PUBLIC RECORDS OF LEE COUNTY, FLORIDA. Strap Number 02-45-24-P2-00800.0140

Names in which assessed: ARGOLICA LLC, ARGOLICA, LLC

All of said property being in the County of Lee, State of Florida. Unless such certificate(s) shall be redeemed according to the law the property described in such certificate(s) will be sold to the highest bidder online at www.lee.realtaxdeed.com on 11/17/2026 at 10:00 am, by Kevin C. Karnes, Lee County Clerk of the Circuit Court & Comptroller.

Sept. 25; Oct. 2, 9, 16, 2026

26-03936L

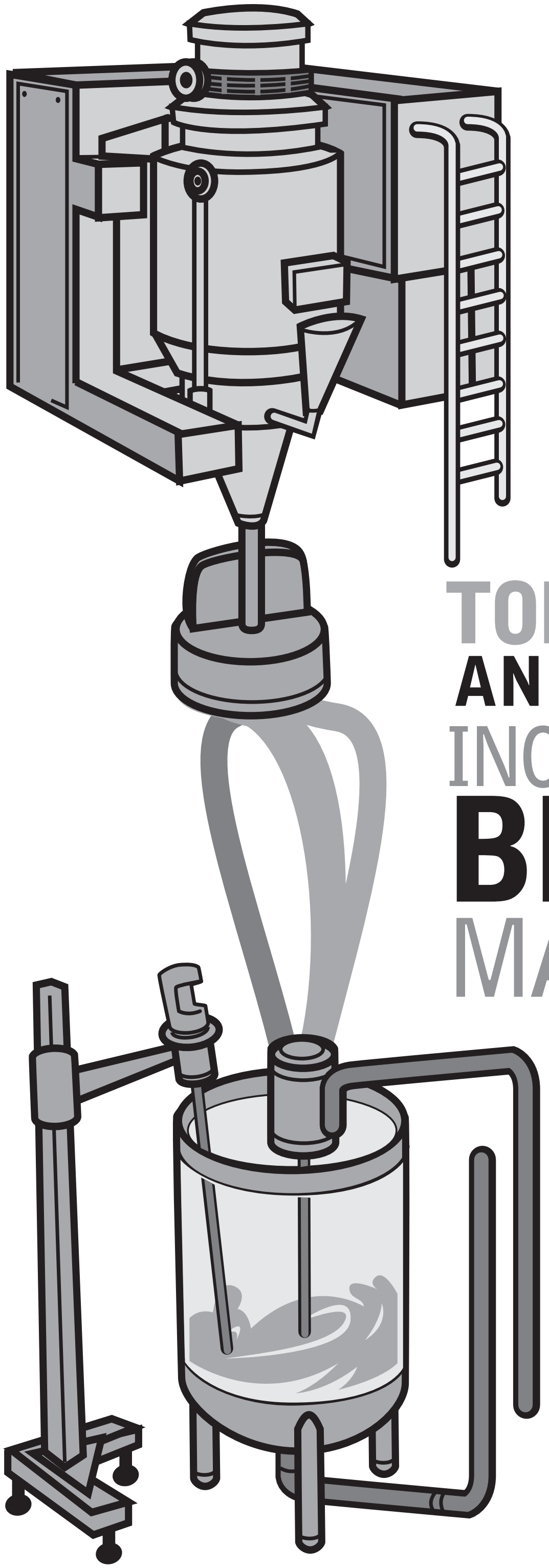

A special printing of a classic story illustrating the importance of protecting capitalism.

TOM SMITH AND HIS INCREDIBLE BREAD MACHINE

By R.W. Grant

Illustrations by Austin McKinley

This is the legend of a man whose name
Was a household word: a man whose fame
Burst on the world like an atom bomb.
Smith was his last name; first name: Tom.

The argument goes on today.
"He was a villain," some will say.
"No! A hero!" others declare.
Or was he both? Well, I despair;
The fight will last 'til kingdom come;
Was Smith a hero? Or was Smith a bum?
So, listen to the story and it's up to you
To decide for yourself as to which is true!

Now, Smith, an inventor, had specialized
In toys. So people were surprised
When they found that he instead
Of making toys, was baking bread!
The news was flashed by CBS
Of his incredible success.
Then NBC jumped in in force,
Followed by the Times, of course.
The reason for their rapt attention,
The nature of his new invention,
The way to make bread he'd conceived
Cost less than people could believe!
And not just make it! This device
Could in addition wrap and slice!
The price per loaf, one loaf or many:
The miniscule sum of under one penny!

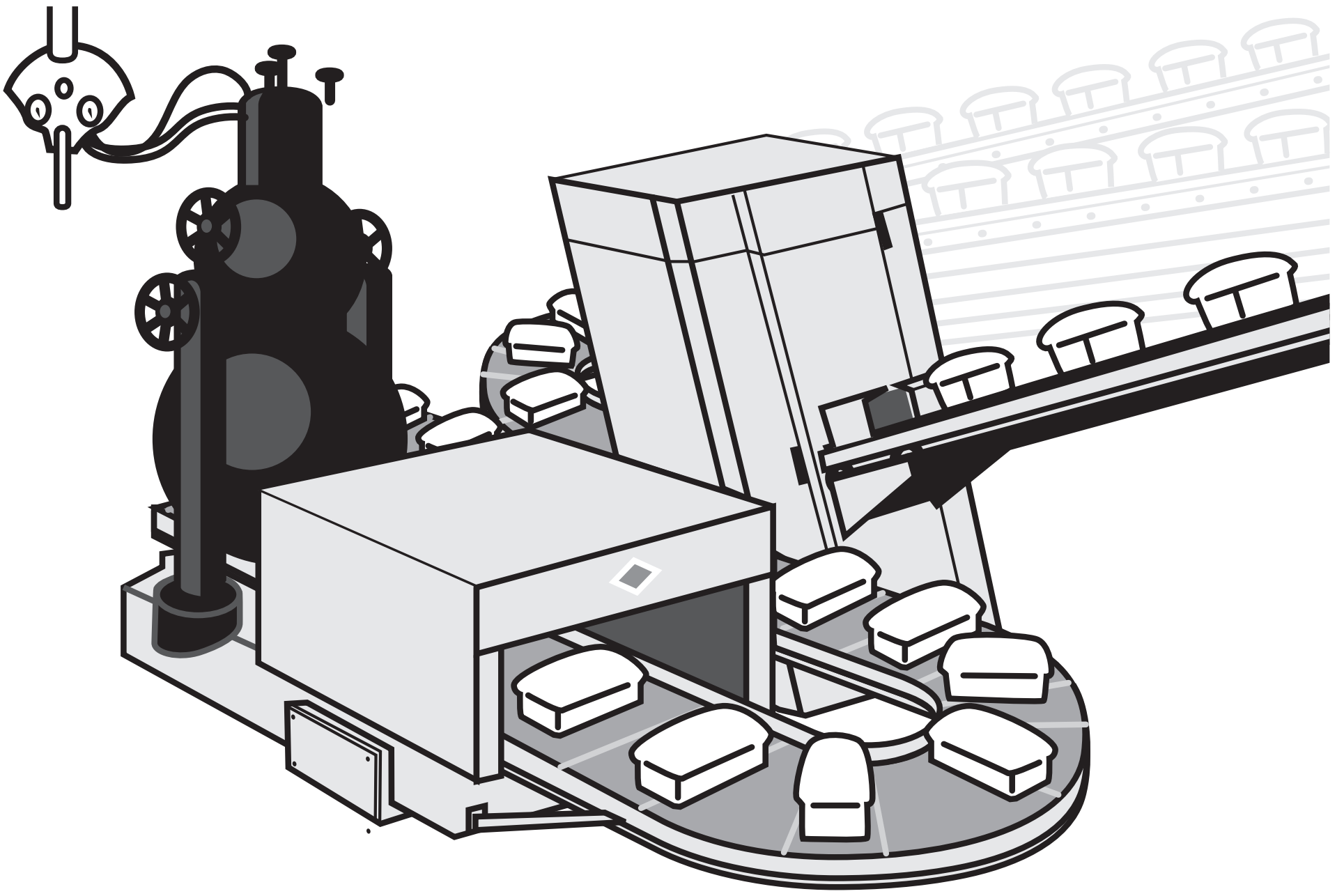

Can you imagine what this meant?
Can you comprehend the consequent?
The first time yet the world well fed!
And all because of Tom Smith's bread!

Not the last to see the repercussions
Were the Red Chinese, and, of course, the Russians,
For Capitalist bread in such array

Threw the whole red block into black dismay!
Nonetheless, the world soon found
That bread was plentiful the world around.
Thanks to Smith and all that bread,
A grateful world was at last well fed!

But isn't it a wondrous thing
How quickly fame is flown?
Smith, the hero of today
Tomorrow, scarcely known!
Yes, the fickle years passed by.
Smith was a billionaire.

But Smith himself was now forgot,
Though bread was everywhere.
People, asked from where it came,
Would very seldom know.

They would simply eat and ask,
'Was not it always so?"

However, Smith cared not a bit,
For millions ate his bread,
And "Everything is fine," thought he.
"I'm rich and they are fed!"

Everything was fine, he thought?
He reckoned not with fate.
Note the sequence of events
Starting on the date
On which inflation took its toll,
And to a slight extent,
The price on every loaf increased:
It went to one full cent!

A sharp reaction quickly came.
People were concerned.
White House aide expressed dismay.
Then the nation learned
That Russia lodged a sharp protest.
India did the same.
"Exploitation of the Poor!"
Yet, who was there to blame?

And though the clamor ebbed and flowed,
All that Tom would say
Was that it was but foolish talk.
Which soon would die away.
And it appeared that he was right.
Though on and on it ran,
The argument went 'round and 'round
But stopped where it began.

There it stopped, and people cried,
"For heaven's sake, we can't decide!
It's relative! Beyond dispute,
There's no such thing as 'absolute'!
And though we try with all our might,
Since nothing's ever black or white,
All that we can finally say is
'Everything one shade of grey is'!"
So people cried out, "Give us light!
We can't tell what's wrong from right!"

To comprehend confusion,
We seek wisdom at its source.
To whom, then did the people turn?
The Intellectuals, of course!

And what could be a better time
For them to take the lead,
Than at their International Conference
On Inhumanity and Greed.
For at this weighty conference,
Once each year we face
The moral conscience of the world—
Concentrated in one place.

At that mighty conference were
A thousand, more or less,
Of intellectuals and bureaucrats,
And those who write the press.
And from Yale and Harvard
The professors; all aware
The fate of Smith would now be known.
Excitement filled the air!

"The time has come," the chairman said
"To speak of many things:
Of duty, bread and selfishness,
And the evil that it brings.
For, speaking thus we can amend
That irony of fate
That gives to unenlightened minds
The power to create.

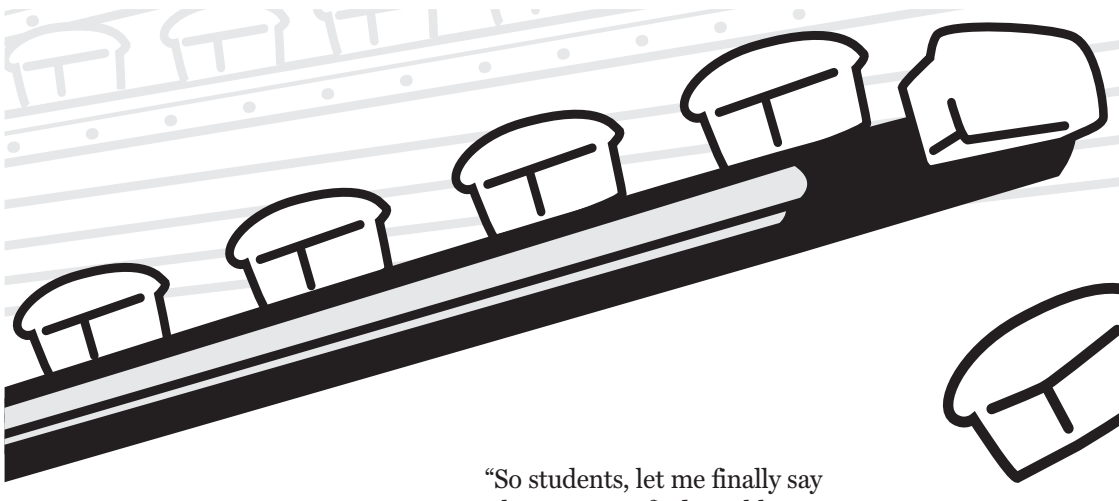

"Since reason tells us that it can't,
Therefore let us start
Not by thinking with the mind,
But only with the heart!
Since we believe in people, then,"
At last the chairman said,
'We must meet our obligation
To see that they are fed!"

And so it went, one by one,
Denouncing private greed;
Denouncing those who'd profit thus
From other people's need!

Then, suddenly each breath was held,
For there was none more wise
Than the nation's foremost Pundit
Who now rose to summarize:

"My friends," he said, (they all
exhaled)
'We see in these events
The flouting of the Higher Law—
And its consequence.
We must again remind ourselves
Just why mankind is cursed:
Because we fail to realize
Society comes first!

"Smith placed himself above the
group
To profit from his brothers.
He failed to see the Greater Good,
Is Service, friends, to Others!"

With boldness and with vision,
then,
They ratified the motion
To dedicate to all mankind
Smith's bread-and their devotion!

The conference finally ended.
It had been a huge success.
The intellectuals had spoken.
Now others did the rest.

The professors joined in all the
fuss,
And one was heard to lecture thus:
(For clarity, he spoke in terms
Of Mother Nature, birds and worms):

"That early birds should get the worm
Is clearly quite unfair.
Wouldn't it much nicer be
If all of them would share?
But selfishness and private greed

Seem part of nature's plan,
Which Mother Nature has decreed
For bird. But also Man?
The system which I question now,
As you are well aware,
(I'm sure you've heard the term
before
Is Business, Laissez-Faire!

"So students, let me finally say
That we must find a nobler way.
So, let us fix the race that all
May finish side-by-side;
The playing field forever flat,
The score forever tied.
To achieve this end, of course,
We turn to government-and force.
So, if we have to bring Smith do
As indeed we should,
I'm sure you will agree with me,
It's for the Greater Good!"

Comments in the nation's press
Now scorned Smith and his plunder:
'What right had he to get so rich
On other people's hunger?"
A prize cartoon depicted Smith
With fat and drooping jowls
Snatching bread from hungry babes,
Indifferent to their howls.

One night, a TV star cried out,
"Forgive me if I stumble,
But I don't think, I kid you not,
That Smith is very humble!"
Growing bolder, he leaped up,

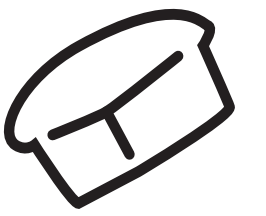

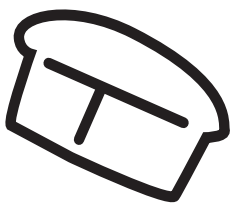

(Silencing the cheers)
"Humility!" he cried to all—
And then collapsed in tears!

The clamor rises all about;
Now hear the politician shout:
'What's Smith done, so rich to be?
Why should Smith have more than thee?
So, down with Smith and all his greed;
I'll protect your right to need!"

Then Tom found to his dismay
That certain businessmen would say,
"The people now should realize
It's time to cut Smith down to size,
For he's betrayed his public trust
(And taken all that bread from us!)"

Well, since the Public does come first,
It could not be denied
That in matters such as this,
The public must decide.
So, SEC became concerned,
And told the press what it had learned:
"It's obvious that he's guilty
—Of what we're not aware—
Though actually and factually
We're sure there's something there!"

And Antitrust now took a hand.
Of course it was appalled
At what it found was going on.
The "bread trust" it was called.

"Smith has too much crust,"
they said. "A deplorable condition
That Robber Barons profit thus
From cutthroat competition!"

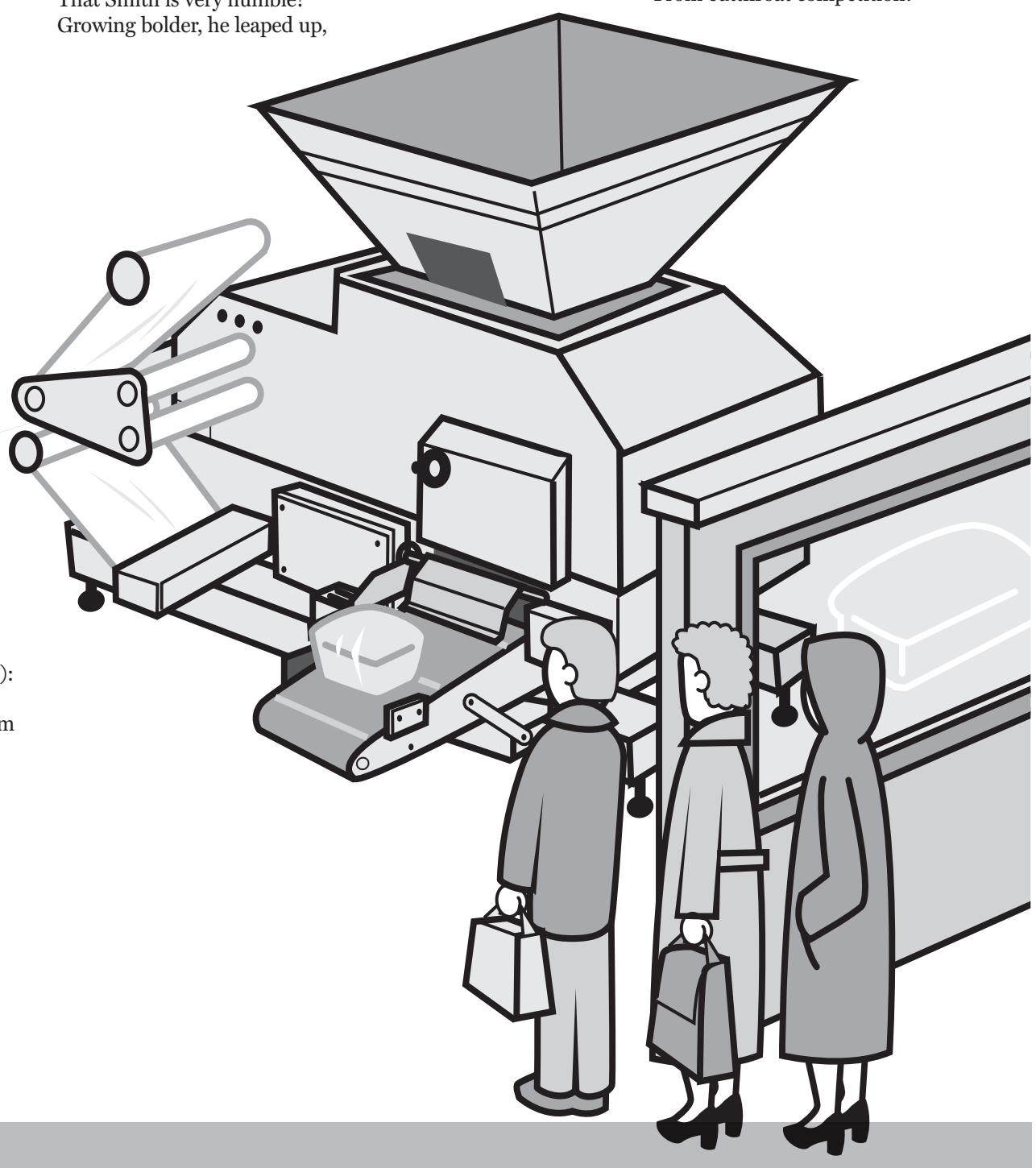

WELL!
This was getting serious!
So Smith felt that he must
Have a friendly interview
With SEC and 'Trust.
So, hat in hand, he went to them.
They'd surely been misled;
No rule of law had he defied.
But then their lawyer said:

"The rule of law, in complex times,
Has proved itself deficient.
We much prefer the rule of men.
It's vastly more efficient.

"So, nutshell-wise, the way it is,
The law is what we say it is!

"So, let me state the present rules,"
The lawyer then went on,
"These very simple guidelines
You can rely upon:
You're gouging on your prices
If you charge more than the rest.
But it's unfair competition
If you think you can charge less!
"A second point that we would make,
To help avoid confusion:
Don't try to charge the same amount,
For that would be collusion!

"You must compete—but not too much.
For if you do, you see,
Then the market would be yours—
And that's monopoly!
Oh, don't dare monopolize!
We'd raise an awful fuss,
For that's the greatest crime of all!
(Unless it's done by us!)"

"I think I understand," said Tom.
"And yet, before I go,
How does one get a job like yours?
I'd really like to know!"

The lawyer rose then with a smile;
"I'm glad you asked," said he.
"I'll tell you how I got my start
And how it came to be."

(His secretaries gathered 'round
As their boss did thus expound.)

'When I was a lad going off to school,
I was always guided by this golden rule:
Let others take the lead in things, for heaven's sake,
So if things go wrong-why, then it's their mistake!"
(So if things go wrong-why, then it's their mistake!)

"Following this precept it came to pass
I became the president of my senior class.
Then on to college where my profs extolled
The very same theory from the very same mold!"
(The very same theory from the very same mold!)

"Let others take the chances, and I would go along.
Then I would let them know where they all went wrong!
So successful was my system that then indeed,
I was voted most likely in my class to succeed!"
(He was voted most likely in his class to succeed!)

"Then out into the world I went, along with all the rest,
Where I put my golden rule to the ultimate test.
I avoided all of commerce at whatever the cost—
And because I never ventured, then I also never lost!"
(And because he never ventured, then he also never lost!)

'With this unblemished record then, I quickly caught the eye
Of some influential people 'mongst the powers on high.

And so these many years among the mighty I have sat,
Having found my niche as a bureaucrat!"
(Having found his niche as a bureaucrat')

"To be a merchant prince has never been my goal,
For I'm qualified to play a more important role:
Since I've never failed in business, this of course assures
That I'm qualified beyond dispute to now run yours!'
(That he's qualified beyond dispute to now run yours!)

"Thanks; that clears it up," said Tom.

The lawyer said, "I'm glad!
We try to serve the public good.
We're really not so bad!

"Now, in disposing of this case,
If you wish to know just how,
Go up to the seventh floor;
We're finalizing now!"

So, Tom went to the conference room
Up on the seventh floor.
He raised his hand, about to knock,
He raised it—but no more—
For what he overheard within
Kept him outside the door!
A sentence here, a sentence there—
Every other word—
He couldn't make it out (he hoped),
For this is what he heard:

"Mumble, mumble, let's not fumble!
Mumble, mumble, what's the charge?
Grumble, grumble, he's not humble?
Private greed? Or good of all?

"Public Interest, Rah! Rah! Rah!
Business, Business, Bah! Bah! Bah!

"Say, now this now we confess
That now this now is a mess!
Well now, what now do we guess?
Discharge? Which charge would be best?

"How 'bout 'Greed and Selfishness'?
Oh, wouldn't that be fun?
It's vague enough to trip him up
No matter what he's done!

'We don't produce or build a thing!
But before we're through,
We allow that now we'll show Smith how
We handle those who do!

'We serve the public interest;
We make up our own laws;
Oh, golly gee, how selflessly
We serve the public cause!

"For we're the ones who make the rules
At 'Trust and SEC,
So bye and bye we'll get that guy;
Now, what charge will it be?

"Price too high? Or price too low?
Now, which charge will we make?
Well, we're not loath to charging both
When public good's at stake!

"But can we go one better?
How 'bout monopoly?
No muss, no fuss, oh clever us!
Right-O! Let's charge all three!

"But why stop here? We have one more!
Insider Trading! Number four!
We've not troubled to define
This crime in any way so,
This allows the courts to find
Him guilty 'cause we say so!"

So, that was the indictment.
Smith's trial soon began.
It was a cause célèbre
Which was followed' cross the land.
In his defense Tom only said,
"I'm rich, but all of you are fed!
Is that bargain so unjust
That I should now be punished thus?"

Tom fought it hard all the way.
But it didn't help him win.
The jury took but half an hour
To bring this verdict in:

"Guilty! Guilty! We agree!
He's guilty of this plunder!
He had no right to get so rich
On other people's hunger!"

"Five years in jail!" the judge then said.
"You're lucky it's not worse!
Robber Barons must be taught
Society Comes First!
As flies to wanton boys," he leered,
"Are we to men like these!
They exploit us for their sport!
Exploit us as they please!"

The sentence seemed a bit severe,
But mercy was extended.
In deference to his mother's pleas,
One year was suspended.
And what about the Bread Machine?
Tom Smith's little friend?
Broken up and sold for scrap.
Some win. Some lose. The end.

EPILOGUE

Now, bread is baked by government.
And as might be expected,
Everything is well controlled—
The public well protected.

True, loaves cost ten dollars each.
But our leaders do their best.
The selling price is half a cent.
Taxes pay the rest!